SPCO

makes life easier

NDS

Single stage double suction
Split casing centrifugal pump
60Hz

Approvals

THE INTERNATIONAL CERTIFICATION NETWORK

CERTIFICATE

IQNet and SQS
hereby certify that the organisation

Swiss Pump Company AG
3645 Thun-Gwatt
Switzerland

Certified area

Whole company

Field of activity

Manufacture and sale of products for the transportation of liquids

has implemented and maintains a
Management System
which fulfills the requirements of the following standard(s)

ISO 9001:2008

Scope No(s): 17, 18, 19
Issued on: 2015-03-03
Validity date: 2018-03-02
Registration Number: ***CH-32160***

Michael Drechsel
President of IQNet

Roland Glauser
CEO SQS

IQNet Partners*:
AENOR Spain AFNOR Certification France AIB-Vincotte International Belgium ANCE-SIGE Mexico APCER Portugal CCC Cyprus
CISQ Italy CQC China CQM China CQS Czech Republic Cro Cert Croatia DQS Holding GmbH Germany
FCAV Brazil FONDONORMA Venezuela ICONTEC Colombia IMNC Mexico Inspecta Certification Finland IRAM Argentina
JQA Japan KFQ Korea MIRTEC Greece MSZT Hungary Nemko AS Norway NSAI Ireland PCBC Poland
Quality Austria Austria RR Russia SII Israel SIQ Slovenia SIRIM QAS International Malaysia
SQS Switzerland SRAC Romania TEST St Petersburg Russia TSE Turkey YUQS Serbia
IQNet is represented in the USA by: AFNOR Certification, CISQ, DQS Holding GmbH and NSAI Inc.
* The list of IQNet partners is valid at the time of issue of this certificate. Updated information is available under www.iqnet-certification.com

General Data

Application	page	4
Operating condition		4
Design		4
Bearing		4
Definition of model		4
Parts		5
Pump and motor arrangement		6
Materials		7
Shaft diameter and bearing		8
Min. Working pressure		10
Impeller, Nozzle forces and moments		11
Arrangement		12
Venting connections and bearing sensor		13
Section view Horizontal installation		14
Section view Vertical installation		15
Section view Shaft seal		16
Section view Mechanical seal		17
Section view Rotor		18
Section view Bearing		19
Bare shaft pump dimensions		22
Performance scope		24
Performance curves		26

Application

Clean water or medium similer to water in physical and chemical properties

- Water supply: Drainage, Irrigation, Power station, Fire-fighting, Air-conditioning, Building industry, Marine applications.
- Apprasive medium: Sand water, Oxide scale water.
- Corrosive medium: Desalination, Bittern, Sea water.
- Water treatment: Ultrafiltration system, reverse osmosis system, distillation system, separator, swimming pool

Pump can be design according to API610 BB1 type service for petroleum, petrochemical and natural gas industries.

Operating Condition

Flow Rate(Q)	: 50 to 20,000m^3/h
Head(H)	: 10 to 230m
Suction Dia.	: 100 to 1400mm
Discharge Dia.	: 80 to 1200mm
Normal temperature type	: -15°C ~ +80°C,
Hot water type	: +80°C ~ +200°C

Design

Type: Axially Split volute casing pump with duble suction impeller
Flange: GB, ISO, DIN, BS, ANSI
Material:
Casing: Cast Iron, Ductile Iron, Cast Steel, Stainless Steel
Impeller: Bronze, Cast Iron, Stainless Steel, Dublex S.S
Shaft : SS420, Duplex stainless steel
Shaft Seal: Optional

Bearing

Horizontal: Grease lubricated ball bearings on both side, oil lubrication is optional.
Sliding bearing is available for big size pump.

Vertical: Grease lubricated ball bearings.

Definition of Model

NDS 200 - 125 - 290 V

- V — Vertical type
- 290 — Impeller nominal diameter(mm)
- 125 — Discharge size(mm)
- 200 — Suction size(mm)

NDS Split case pump

Parts

Casing

In-line axially split design which permits removal of the complete rotor without moving the pipe and motor.

Short distance between bearings.

Leak-tight due to compact joint flange with long, prestressed bolts.

Counter-rotation possible with similar parts.

Double volute casing reduces radial forces on the impeller and consequently the bearing loads.

Easy mounting self-aligning upper casing.

Flange drilled to ISO, DIN, BS or ANSI

Smooth surface inside and epoxy coating as required.

Replacable wear rings protect the casing at the impeller running clearances.

Excelent efficiencies and outstanding NPSH.

Shaft

Heavy duty shaft completely sealed and dry for zero corrosion.

Short and rigid with negligable vibrations.

Replaceable shaft protecting sleeves.

No threads exposed to pumpes medium.

Long operation life and no corrosion.

Adjustment-free assembly.

Quick and easy assembly / dismantling of the rotor components due to elastically prestressed mountings.

Maximum interchangeability shafts design.

Entire series for 2900rpm and 1450rpm models just six shaft and six bearing assemblies.

Bearing

SKF covered, sealed for life grease lubricated antifriction bearing for long service life.

Open gland, enough space for service activities.

Optional: oil lubrication with constant level oiler.

Impeller

Computer-optimized double entry impellers.

Minimal axial thrust due to double-entry impeller.

Impeller is statically and dynamically balanced according to ISO 1940.

Optional impeller wear rings.

New vane passage with excellent hydraulic characteristics high-performance.

Seal

Asbestos-free, potable water quality soft-packed stuffing boxes.

Unbalanced mechanical seal, according to DIN24960. Balance mechanical seal for operating pressure > 16bar

Cartridge-type mechanical seal on required.wear and abrasive resistance.
The materials are FDA compliant materials.

Impeller Bowls are made from Stainless steel 304 maximizing wear from abrasion.

Pump and Motor Arrangement

Horizontal

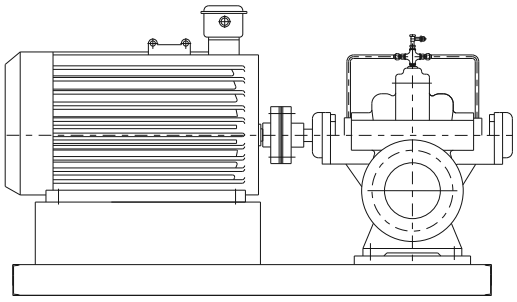

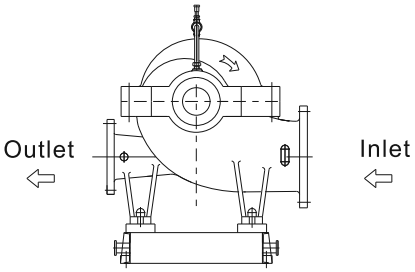

Vertical

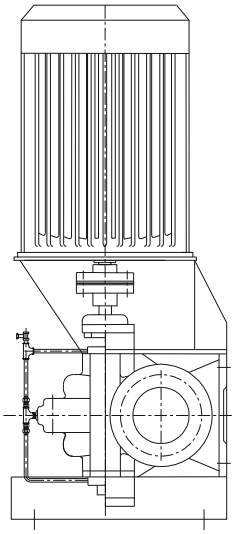

TB

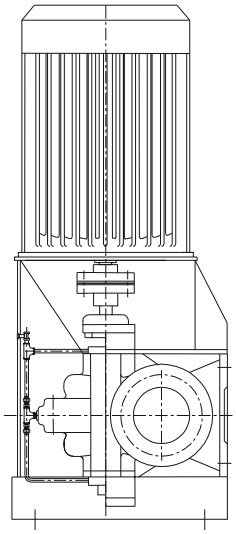

TK

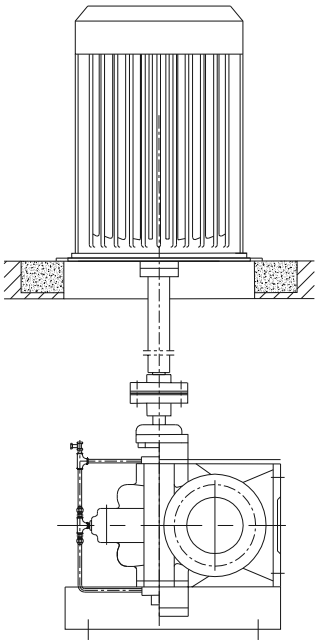

TJ

Direction of Rotation and Flow Direction

Horizontal

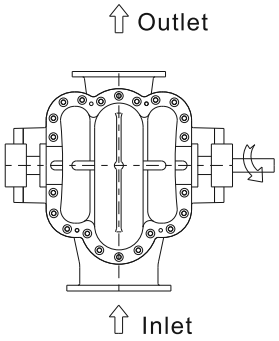

Anticlockwise viewed from the drive end
CCW

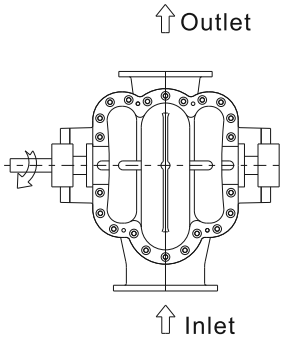

Clockwise viewed from the drive end
CW

Vertical

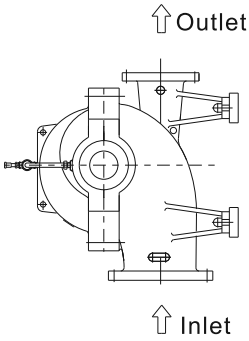

Anticlockwise viewed from the drive end
CCW

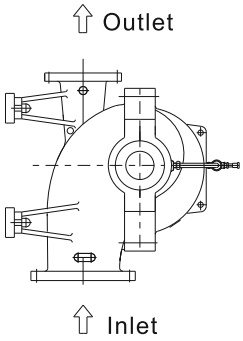

Clockwise viewed from the drive end
CW

Standard materials

Part	Clean Water	Water with mud and sand Oxide scale water Sewage / Saline water	Sea water	Hot water
Casing	Cast iron	Nicel chromium cast iron Wear resistant cast iron Cast steel Wear resistant coating	Duplex stainless steel	Ductile CI Cast steel Stainless steel
Impeller	CI Bronze Stainless steel	Ductile CI SS420 Stainless steel	Duplex stainless steel	SS420 Stainless steel
Bearing housing	Cast iron	Cast iron	Cast iron	Cast iron
Shaft	SS420	SS420	Duplex stainless steel	SS420 Stainless steel
Wear ring	Cast iron	Ductile CI SS420	Bronze Suplex stainless steel with hardening treatment	Ductile CI Cast steel
Shaft sleeve	SS420	SS420	Duplex stainless steel	SS420
Shafy seal	Packing Mechanical seal	Packing Mechanical seal	Mechanical seal	Mechanical seal
Flushing pipeline	Q235-A	Q235-A	316L	Q235-A Stainless steel

• for Petrochemical liquids: According to API610, I-1, I-2, S-5, S-8, C-6, A-7, A-8, D-1, D-2.

Shaft diameter, Shaft seal and bearing

Model	Dimensions [mm]						
	Shaft	Nominal	Sealed chamber D	sealed chamber L	Bearing	Mechanical seal	Pump structure
NDS 125-80-210 NDS 125-80-270 NDS 125-80-350	35	50	75	72	6307 SKF	M74N/50-G92-Q2BVV (Mechanical seal Type B)	Horizontal installation Type C
NDS 150-100-250 NDS 150-100-320 NDS 150-100-400	35	50	75	72	6307 SKF	M74N/50-G92-Q2BVV (Mechanical seal Type B)	Horizontal installation Type C
NDS 200-125-240 NDS 200-125-300 NDS 200-125-380 NDS 200-125-480	45	60	85	82	6309SKF	M74N/60-G92-Q2BVV (Mechanical seal Type B)	Horizontal installation Type C
NDS 200-150-290 NDS 200-150-360	45	60	85	82	6309 SKF	M74N/60-G92-Q2BVV (Mechanical seal Type B)	Horizontal installation Type C
NDS 200-150-460 NDS 200-150-570	55	70	95	85	6311 SKF	M74N/70-G92-Q2BVV (Mechanical seal Type B)	Horizontal installation Type C
NDS 250-200-340 NDS 250-200-430	55	70	95	85	6311 SKF	M74N/70-G92-Q2BVV (Mechanical seal Type B)	Horizontal installation Type C
NDS 250-200-530 NDS 250-200-660	65	80	110	93	6313 FAG	M74N/80-G92-Q2BVV (Mechanical seal Type B)	Horizontal installation Type C
NDS 300-250-270 NDS 300-250-280	55	70	95	85	6311 SKF	M74N/70-G92-Q2BVV (Mechanical seal Type B)	Horizontal installation Type C
NDS 300-250-390	65	80	110	93	6313 FAG	M74N/80-G92-Q2BVV (Mechanical seal Type B)	Horizontal installation Type C
NDS 300-250-490 NDS 300-250-610	75	90	120	92	6315 SKF	M74N/90-G92-Q2BVV (Mechanical seal Type A)	Horizontal installation Type A
NDS 300-250-780	85	110	150	130	6318 SKF	M75N/110-G92-Q2BVV (Mechanical seal Type A)	Horizontal installation Type A
NDS 350-300-310 NDS 350-300-330	65	80	110	93	6313 FAG	M74N/80-G92-Q2BVV (Mechanical seal Type B)	Horizontal installation Type C

• Values are valid for the pumps under normal pressure and temperature, if the temp more than 80°C please contact SPCO.

Shaft diameter, Shaft seal and bearing

Model	Dimensions [mm]						
	Shaft	Nominal	Sealed chamber D	sealed chamber L	Bearing	Mechanical seal	Pump structure
NDS 400-300-450	75	90	120	92	6315 SKF	M74N/90-G92-Q2BVV (Mechanical seal Type A)	Horizontal installation Type A
NDS 400-300-570 NDS 400-300-700	85	110	150	130	6318 SKF	M74N/110-G92-Q2BVV (Mechanical seal Type A)	Horizontal installation Type A
NDS 400-350-360 NDS 400-350-380	75	90	120	92	6315 SKF	M74N/90-G92-Q2BVV (Mechanical seal Type A)	Horizontal installation Type A
NDS 400-350-520	85	110	150	130	6318 SKF	M74N/110-G92-Q2BVV (Mechanical seal Type A)	Horizontal installation Type A
NDS 450-450-350	75	90	120	92	6315 SKF	M74N/90-G92-Q2BVV (Mechanical seal Type A)	Horizontal installation Type A
NDS 500-300-780 NDS 500-300-920	115	150	195	180	NU324 6324 SKF	M74N/150-G92-Q2BVV (Mechanical seal Type A)	Horizontal installation Type A
NDS 500-400-400 NDS 500-400-420	75	90	120	92	6315 SKF	M74N/90-G92-Q2BVV (Mechanical seal Type A)	Horizontal installation Type A
NDS 500-400-540	100	135	180	150	NU321 6321 SKF	M74N/135-G92-Q2BVV (Mechanical seal Type A)	Horizontal installation Type B
NDS 500-400-570	75	90	120	92	6315 SKF	M74N/90-G92-Q2BVV (Mechanical seal Type A)	Horizontal installation Type A
NDS 500-400-660	100	135	180	150	NU321 6321 SKF	M74N/135-G92-Q2BVV (Mechanical seal Type A)	Horizontal installation Type B
NDS 500-400-675	85	110	150	130	6318 SKF	M74N/110-G92-Q2BVV (Mechanical seal Type A)	Horizontal installation Type A
NDS 600-400-740 NDS 600-450-640	100	135	180	150	NU321 6321 SKF	M74N/135-G92-Q2BVV (Mechanical seal Type A)	Horizontal installation Type B
NDS 600-500-520	80	115	160	170	6317 FAG	M74N/115-G92-Q2BVV (Mechanical seal Type A)	Horizontal installation Type A
NDS 600-500-550 NDS 600-500-580	80	115	160	170	6320 SKF	M74N/115-G92-Q2BVV (Mechanical seal Type A)	Horizontal installation Type A
NDS 700-500-670	100	135	180	150	NU321 6321 SKF	M74N/135-G92-Q2BVV (Mechanical seal Type A)	Horizontal installation Type B
NDS 700-500-940	130	170	215	176	NU328 6328 SKF	M74N/170-G92-Q2BVV (Mechanical seal Type A)	Horizontal installation Type A
NDS 700-600-600 NDS 700-600-680	100	135	180	150	NU321 6321 SKF	M74N/135-G92-Q2BVV (Mechanical seal Type A)	Horizontal installation Type B
NDS 700-600-740	115	150	195	180	NU324 6324 SKF	M74N/150-G92-Q2BVV (Mechanical seal Type A)	Horizontal installation Type A
NDS 800-700-750	120	160	205	170	NU326 6326 SKF	M74N/160-G92-Q2BVV (Mechanical seal Type A)	Horizontal installation Type B

• Values are valid for the pumps under normal pressure and temperature, if the temp more than 80°C please contact SPCO.

Pressure limits

Model	Operating pressure
NDS 125-80-210	1.6
NDS 125-80-270	1.6
NDS 125-80-350	1.6
NDS 150-100-250	1.6
NDS 150-100-320	1.6
NDS 150-100-400	1.6
NDS 200-125-240	1.6
NDS 200-125-300	1.6
NDS 200-125-380	1.6
NDS 200-125-480	1.6
NDS 200-150-290	1.6
NDS 200-150-360	1.6
NDS 200-150-460	1.6
NDS 200-150-570	2.5
NDS 250-200-340	1.6
NDS 250-200-430	1.6
NDS 250-200-530	1.6
NDS 250-200-660	2.5
NDS 300-250-270	1.6
NDS 300-250-280	1.6
NDS 300-250-390	1.6
NDS 300-250-490	1.6
NDS 300-250-610	2.5
NDS 300-250-780	3.0
NDS 350-300-310	1.6
NDS 350-300-330	1.6

Model	Operating pressure
NDS 400-300-450	1.6
NDS 400-300-570	1.6
NDS 400-300-700	2.5
NDS 400-350-360	1.6
NDS 400-350-380	1.6
NDS 400-350-520	1.6
NDS 450-450-350	1.0
NDS 500-300-780	4.0
NDS 500-300-920	2.5
NDS 500-400-400	1.6
NDS 500-400-420	1.6
NDS 500-400-540	1.6
NDS 500-400-570	1.0
NDS 500-400-660	2.5
NDS 500-400-675	1.0
NDS 600-400-740	1.6
NDS 600-450-640	1.6
NDS 600-500-520	1.0
NDS 600-500-550	1.0
NDS 600-500-580	1.0
NDS 700-500-670	1.6
NDS 700-500-940	2.5
NDS 700-600-600	1.0
NDS 700-600-680	1.0
NDS 700-600-740	1.6
NDS 800-700-750	1.0

• Note: Values are valid for casing materials cast iron, for higher values, the other materials with better strength are available.

• Standard test pressure: $1.5xH_{\text{Duty point}}$ + Suction pressure

Impeller, Nozzle forces and Nozzle moments

Model	Impeller Dimensions(mm)		Permissible Nozzle forces Fx、Fy、Fz N	Permissible Nozzle moments Mx、My、Mz Nm
	Free passage +/−10%	Max.Diameter		
NDS125-80-210	30	216	800	500
NDS125-80-270	25	270		
NDS125-80-350	22	345		
NDS150-100-250	30	254	1000	700
NDS150-100-320	24	325		
NDS150-100-400	21	423		
NDS200-125-240	48	250	1500	1000
NDS200-125-300	37	301		
NDS200-125-380	35	395	2000	1500
NDS120-125-480	29	491		
NDS200-150-290	52	290	2500	
NDS200-150-360	44	370		2000
NDS200-150-460	35	460		
NDS200-150-570	32	585	3000	
NDS250-200-340	57	338	4000	2750
NDS250-200-430	52	426		
NDS250-200-530	40	530		
NDS250-200-660	38	665		
NDS300-250-270	119	302		
NDS300-250-280	96	321		
NDS300-250-390	70	395		
NDS300-250-490	60	490		
NDS300-250-610	45	610		
NDS300-250-780	42	770		3000
NDS350-300-310	132	310		
NDS350-300-330	101	350		
NDS400-300-450	81	450		
NDS400-300-570	67	580	5000	
NDS400-300-700	65	700		
NDS400-350-360	149	360		
NDS400-350-380	122	415		
NDS400-350-520	90	558		
NDS450-450-350	161	350		
NDS500-300-780	81	780	5600	3750
NDS500-300-920	85.4	920		
NDS500-400-400	180.6	412		
NDS500-400-420	180	425		
NDS500-400-540	105	545		
NDS500-400-570	105	545		
NDS500-400-660	84.9	666		
NDS500-400-675	84.9	666		
NDS600-400-740	99	740	6300	4700
NDS600-450-640	128	650		
NDS600-500-520	175	520		5500
NDS600-500-550	243	580		
NDS600-500-580				
NDS700-500-670	130	672	7000	5800
NDS700-500-940	128.5	940		
NDS700-600-600	103.5	610		
NDS700-600-680	240	702		6300
NDS700-600-740	146	780		
NDS800-700-750	315.9	750	7700	7000

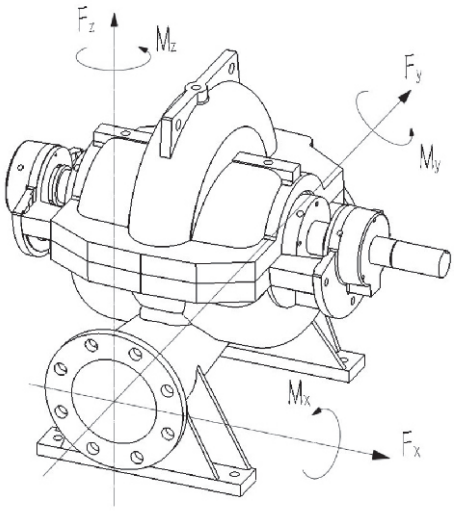

• Note: Values are valid for casing materials cast iron, for casing material ductile cast iron use 1.4-fold, and for cast steel use 1.7. If require for dimension of pump which is not shown in the above table, please contact SPCO.

Arrangement

Sealing Water Pipes

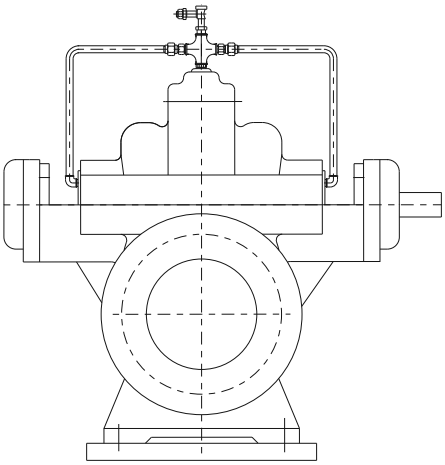

01Flushing water piping stuffing box
Note: If H>80m, flushing water piping will have control valve(See fig.04)

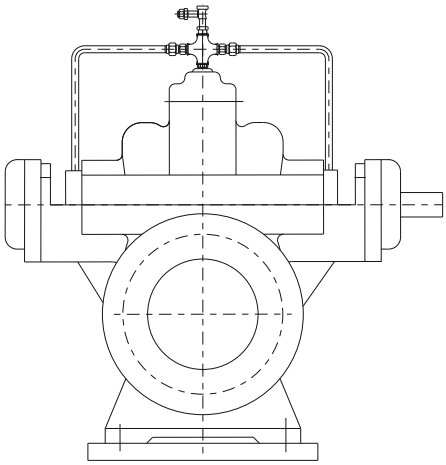

02Flushing water piping mechanical seal

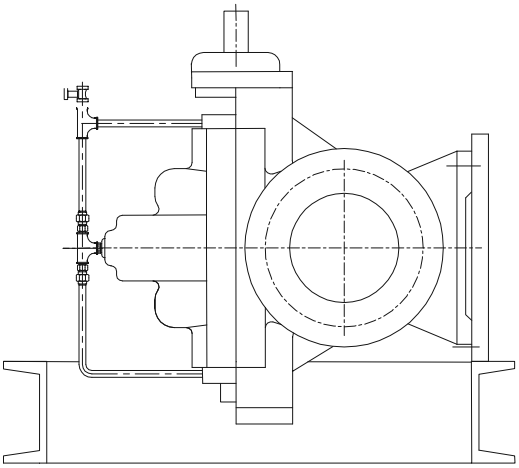

▲ 03 Mechanical seal and flushing water piping for lineshaft bearing

Venting connections and bearing temperature sensor

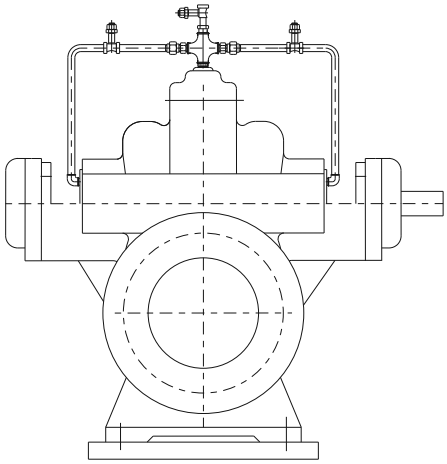

04Flushing water piping stuffing box with vent valve

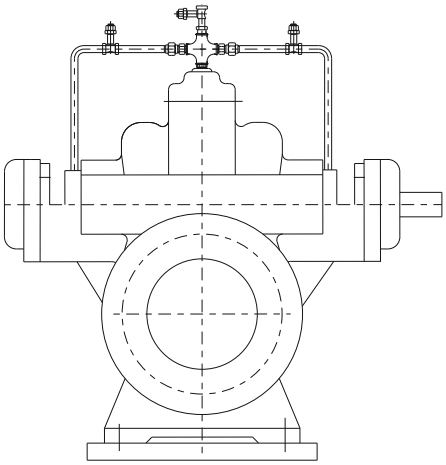

05Flushing water piping mechanical seal with vent valve

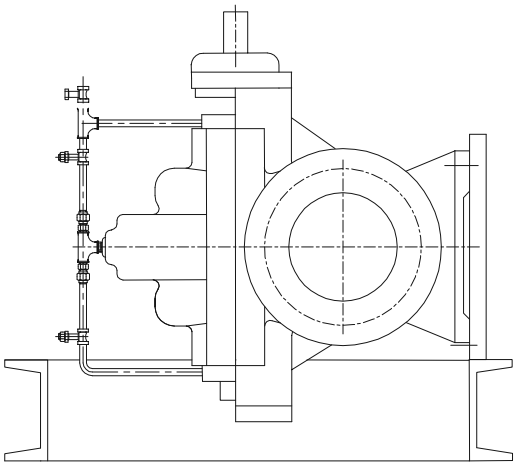

06 Flushing water piping and vent valve(Vertical installation)

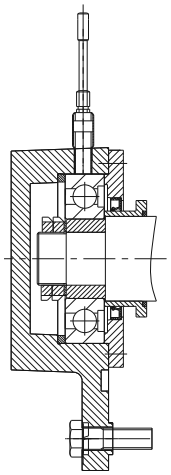

07Bearing temperature sensor (PT100)

Sectional view • Horizontal installation (Type A)

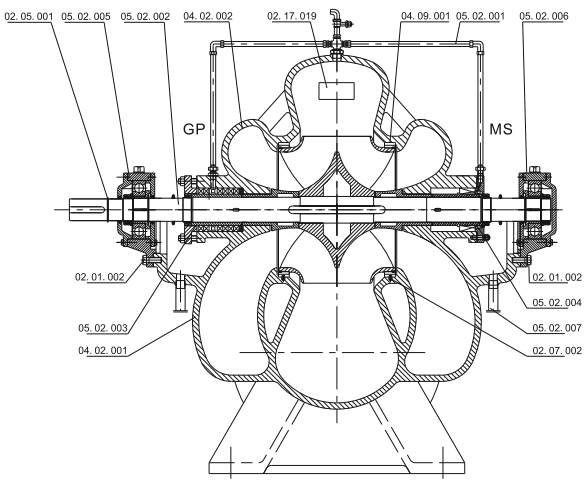

Type A

Part Number	Part Name
02.05.001	Shaft circlip
05.02.005	Bearing assembly (DE)
05.02.002	Rotor assembly
04.02.002	Upper casing
02.17.019	Name plate
04.09.001	Casing wear ring
05.02.001	Flushing water piping
05.02.006	Bearing assembly (NDE)
02.01.002	Bolt
05.02.003	Packing seal assembly
04.02.001	Lower casing
05.02.004	Mechanical seal assembly
05.02.007	Drainage piping
02.07.002	Wear ring dowel pin

Sectional view • Horizontal installation (Type B)

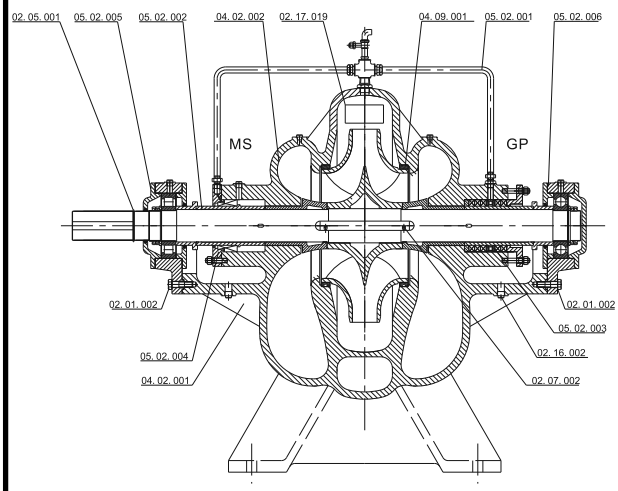

Type B

Part Number	Part Name
02.05.001	Shaft circlip
05.02.005	Bearing assembly (DE)
05.02.002	Rotor assembly
04.02.002	Upper casing
02.17.019	Name plate
04.09.001	Casing wear ring
05.02.001	Flushing water piping
05.02.006	Bearing assembly (NDE)
02.01.002	Bolt
05.02.003	Packing seal assembly
04.02.001	Lower casing
05.02.004	Mechanical seal assembly
02.16.002	Plug
02.07.002	Wear ring dowel pin

Sectional view • Horizontal installation (Type C)

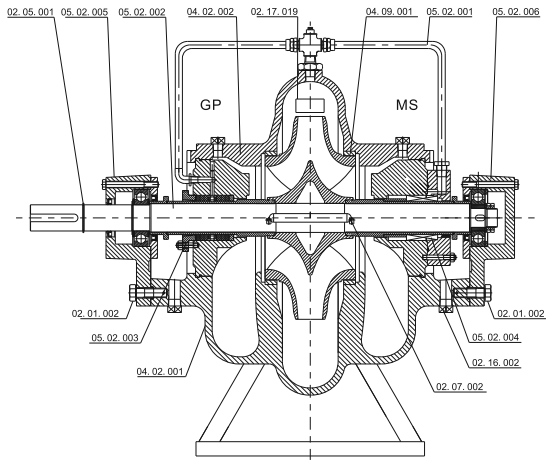

Type C

Part Number	Part Name
02.05.001	Shaft circlip
05.02.005	Bearing assembly (DE)
05.02.002	Rotor assembly
04.02.002	Upper casing
02.17.019	Name plate
04.09.001	Casing wear ring
05.02.001	Flushing water piping
05.02.006	Bearing assembly (NDE)
02.01.002	Bolt
05.02.003	Packing seal assembly
04.02.001	Lower casing
05.02.004	Mechanical seal assembly
02.16.002	Plug
02.07.002	Wear ring dowel pin

Sectional view • Vertical installation

Vertical Installation

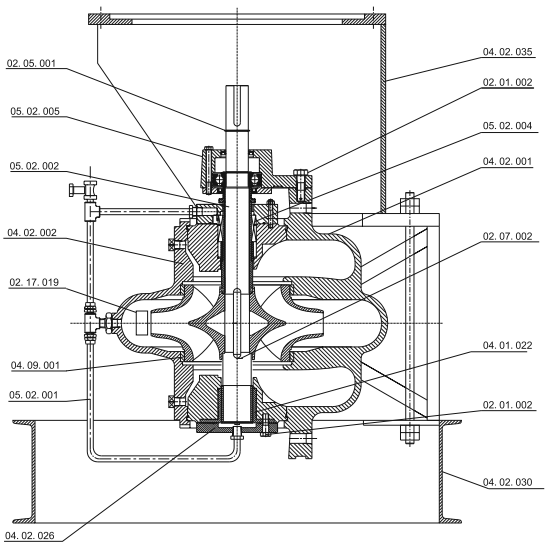

Part Number	Part Name
02.05.001	Shaft circlip
05.02.005	Bearing assembly (DE)
05.02.002	Rotor assembly
04.02.002	Upper casing
02.17.019	Name plate
04.09.001	Casing wear ring
05.02.001	Flushing water piping
04.02.006	Cap
04.02.035	Motor riser
02.01.002	Bolt
04.02.001	Lower casing
05.02.004	Mechanical seal assembly
04.01.022	Bearing bush
02.07.002	Wear ring dowel pin
04.02.030	Foot

Sectional view • Shaft seal (Type A)

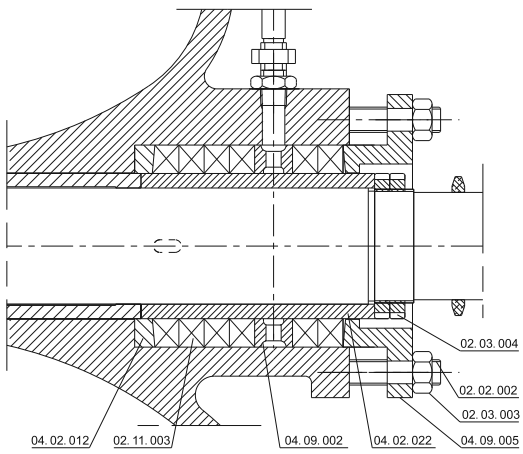

Type A—Apply to horizontal installation type A and B

Part Number	Part Name
04.02.012	Set neck ring
02.11.003	Gland packing
04.09.002	Lantern ring
04.02.022	Shaft protecting sleeve
04.09.005	Gland
02.03.003	Nut
02.02.002	Bolt
02.03.004	Round nut

Sectional view • Shaft seal (Type B)

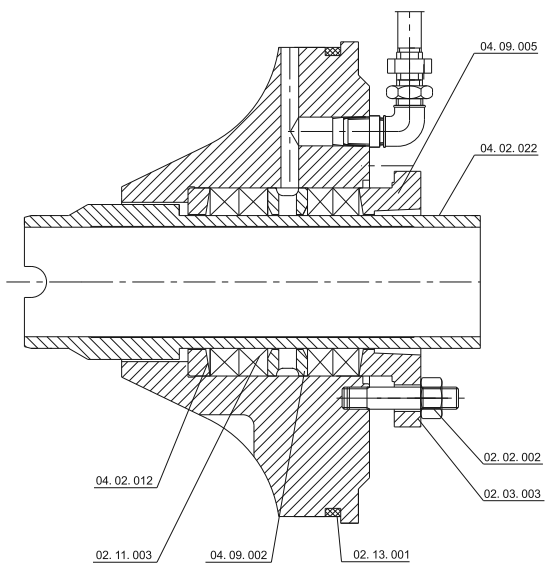

Type B—Apply to horizontal installation type C

Part Number	Part Name
04.09.005	Gland
04.02.022	Shaft protecting sleeve
04.02.012	Set neck ring
02.11.003	Gland packing
04.09.002	Lantern ring
02.13.001	O-Ring
02.03.003	Nut
02.02.002	Bolt

Sectional view • Mechanical seal (Type A)

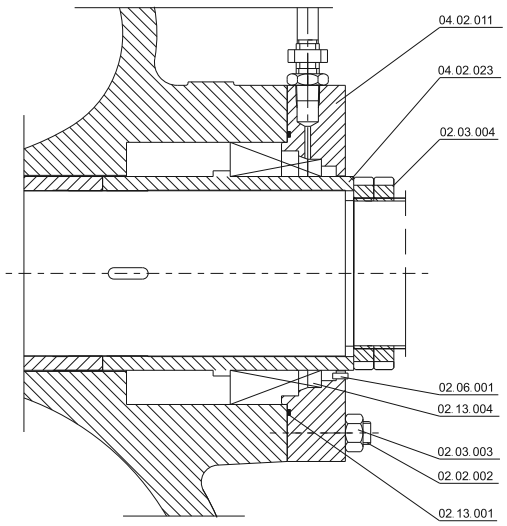

Type A—Apply to horizontal installation type A and B

Part Number	Part Name
04.02.011	Seal cover
04.02.023	Shaft protecting sleeve
02.03.004	Round nut
02.06.001	Round pin
02.13.004	Shaft seal unit
02.03.003	Nut
02.02.002	Bolt
02.13.001	O-Ring

Sectional view • Mechanical seal (Type B)

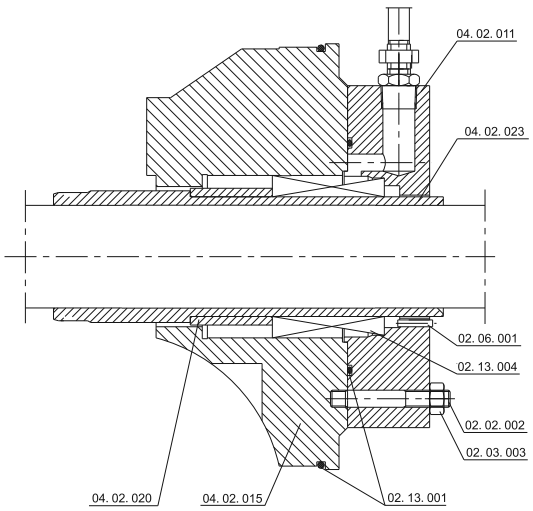

Type B—Apply to horizontal installation type C

Part Number	Part Name
04.02.011	Seal cover
04.02.023	Shaft protecting sleeve
02.06.001	Round pin
02.13.004	Shaft seal unit
02.02.002	Bolt
02.03.003	Nut
02.13.001	O-Ring
04.02.015	Shaft seal housing
04.02.020	Spacer sleeve

Sectional view • Rotor (Type A)

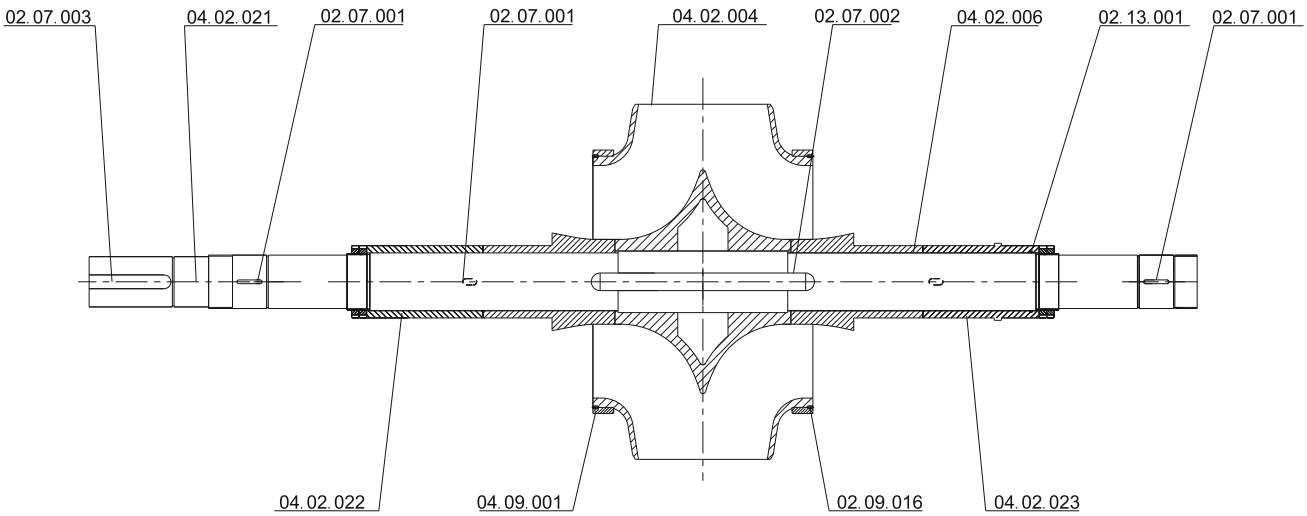

Type A—Apply to horizontal installation type A

Part No.	Part Name	Part No.	Part Name	Part No.	Part Name
02.07.003	Key C	04.02.021	Shaft	02.07.001	Key A
04.02.004	Impeller	02.07.002	Key B	04.02.006	Shaft protecting sleeve
02.13.001	O-Ring	04.02.022	Shaft protecting sleeve(GP)	04.09.001	Impeller seal ring
02.09.016	Impeller locating screw	04.02.023	Shaft protecting sleeve(MS)		

Sectional view • Rotor (Type B)

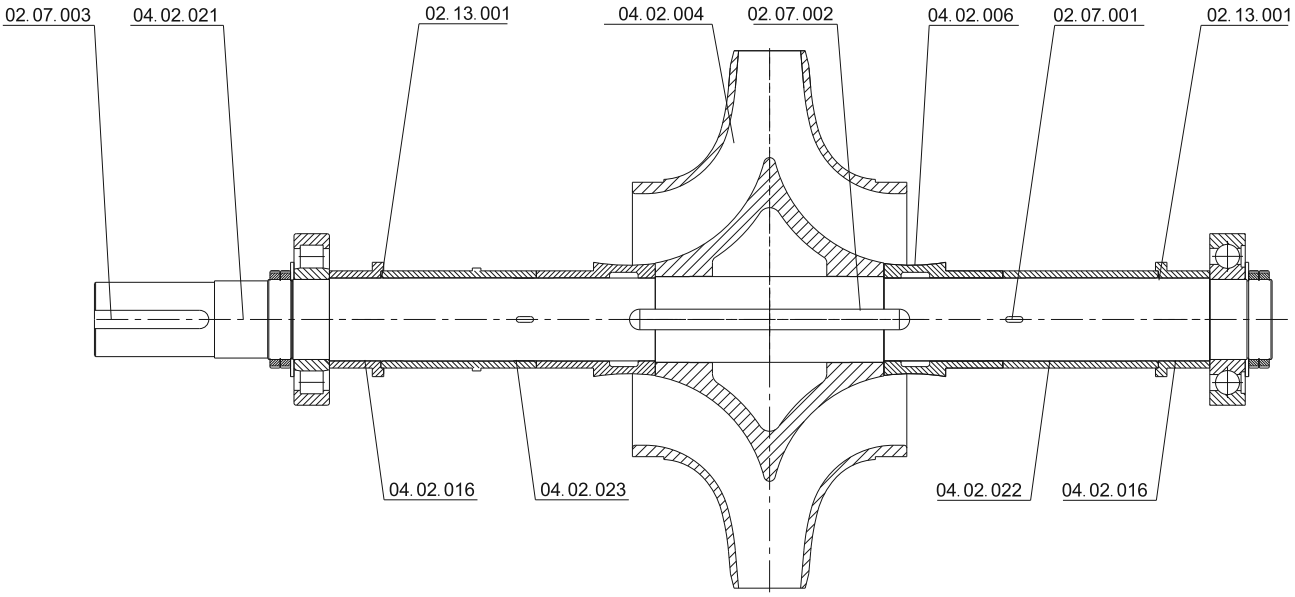

Type B—Apply to horizontal installation type B

Part No.	Part Name	Part No.	Part Name	Part No.	Part Name
02.07.003	Key C	04.02.021	Shaft	02.13.001	O-Ring
04.02.004	Impeller	02.07.002	Key B	04.02.006	Shaft protecting sleeve
02.07.001	Key A	04.02.016	Water baffle sleeve	04.02.023	Shaft protecting sleeve(MS)
04.02.022	Shaft protecting sleeve(GP)				

Sectional view • Rotor (Type C)

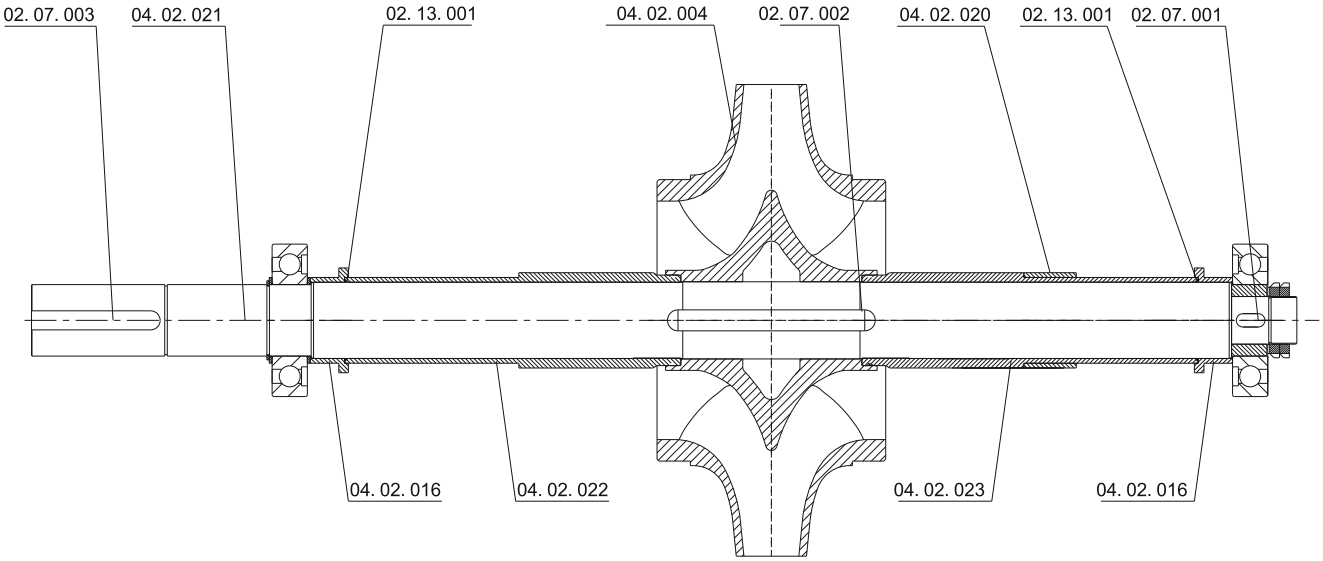

Type C—Apply to horizontal installation type C

Part No.	Part Name	Part No.	Part Name	Part No.	Part Name
02.07.003	Key C	04.02.021	Shaft	02.13.001	O-Ring
04.02.004	Impeller	02.07.002	Key B	04.02.020	Spacer sleeve(MS)
02.07.001	Key A	04.02.016	Water baffle sleeve	04.02.022	Shaft protecting sleeve(GP)
04.02.023	Shaft protecting sleeve(MS)				

Sectional view • Bearing (Type A)

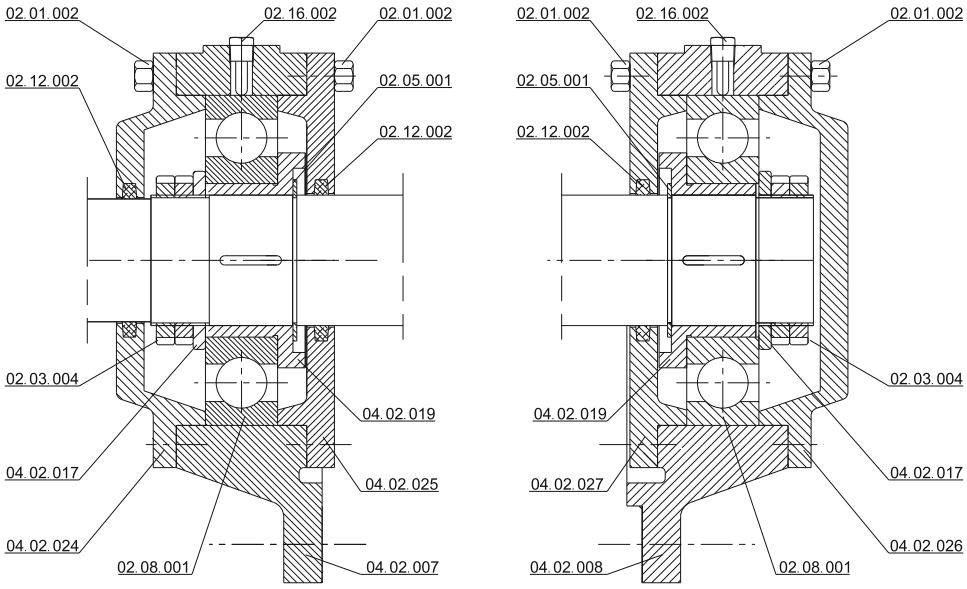

Type A---Apply to horizontal installation type A

Part No.	Part Name	Part No.	Part Name	Part No.	Part Name	Part No.	Part Name
02.01.002	Hex bolts	02.12.002	Felt ring	02.03.004	Round nut	04.02.017	Bearing circlip
04.02.024	Bearing outer cover(DE)	02.08.001	Deep groove ball bearing	02.16.002	Plug	02.05.001	Shaft Circlip
04.02.019	Bearing sleeve	04.02.025	Bearing inner cover (DE)	04.02.007	Bearing housing (DE)	04.02.027	Bearing inner cover (NDE)
04.02.008	Bearing housing (NDE)	04.02.026	Bearing outer cover (NDE)				

Sectional view • Bearin (Type B)

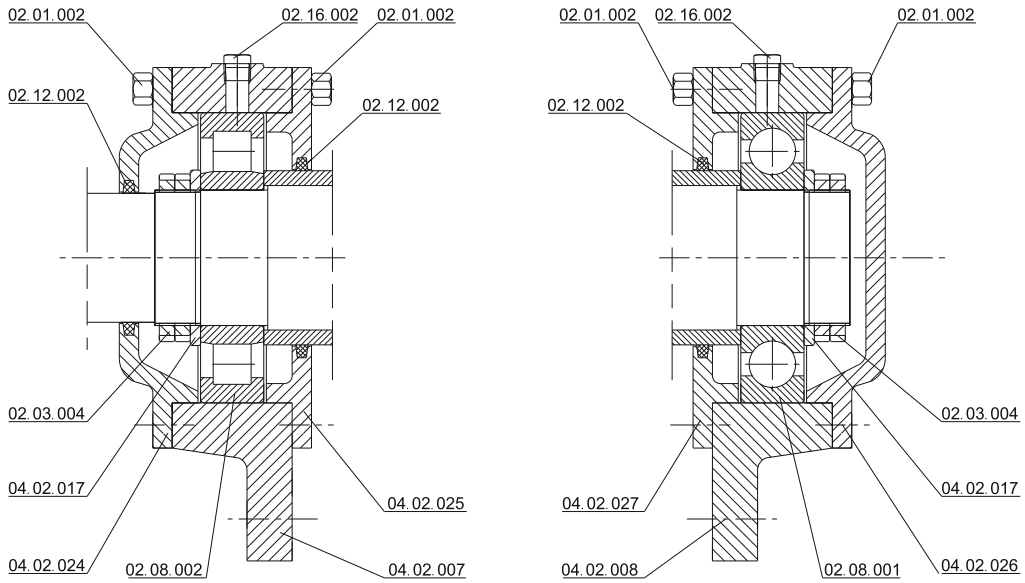

Type B—Apply to horizontal installation type B

Part No.	Part Name	Part No.	Part Name	Part No.	Part Name	Part No.	Part Name
02.01.002	Hex bolts	02.12.002	Felt ring	02.03.004	Round nut	04.02.017	Bearing circlip
04.02.024	Bearing outer cover(DE)	02.08.002	Roller bearing	02.16.002	Plug	04.02.025	Bearing inner cover (DE)
04.02.007	Bearing housing (DE)	04.02.027	Bearing inner cover (NDE)	04.02.008	Bearing housing (NDE)	02.08.001	Deep groove ball bearing
04.02.026	Bearing outer cover (NDE)						

Sectional view • Bearing (Type C)

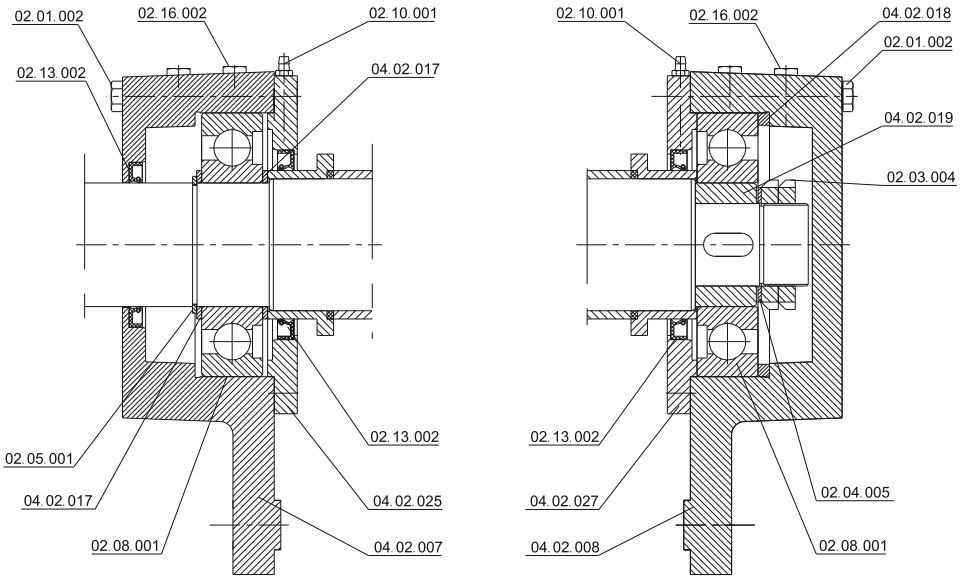

Type C—Apply to horizontal installation type C

Part No.	Part Name	Part No.	Part Name	Part No.	Part Name	Part No.	Part Name
02.01.002	Hex bolts	02.13.002	Lip-type seal ring	02.05.001	Shaft Circlip	04.02.017	Bearing circlip
02.08.001	Deep groove ball bearing	02.16.002	Plug	02.10.001	Straight-through type oil cup	04.02.025	Bearing inner cover (DE)
04.02.007	Bearing housing (DE)	04.02.027	Bearing inner cover (NDE)	04.02.008	Bearing housing (NDE)	04.02.018	Bearing locating ring
04.02.019	Bearing sleeve	02.03.004	Round nut	02.04.005	Spring		

Sectional view • Bearing with oil lubrication

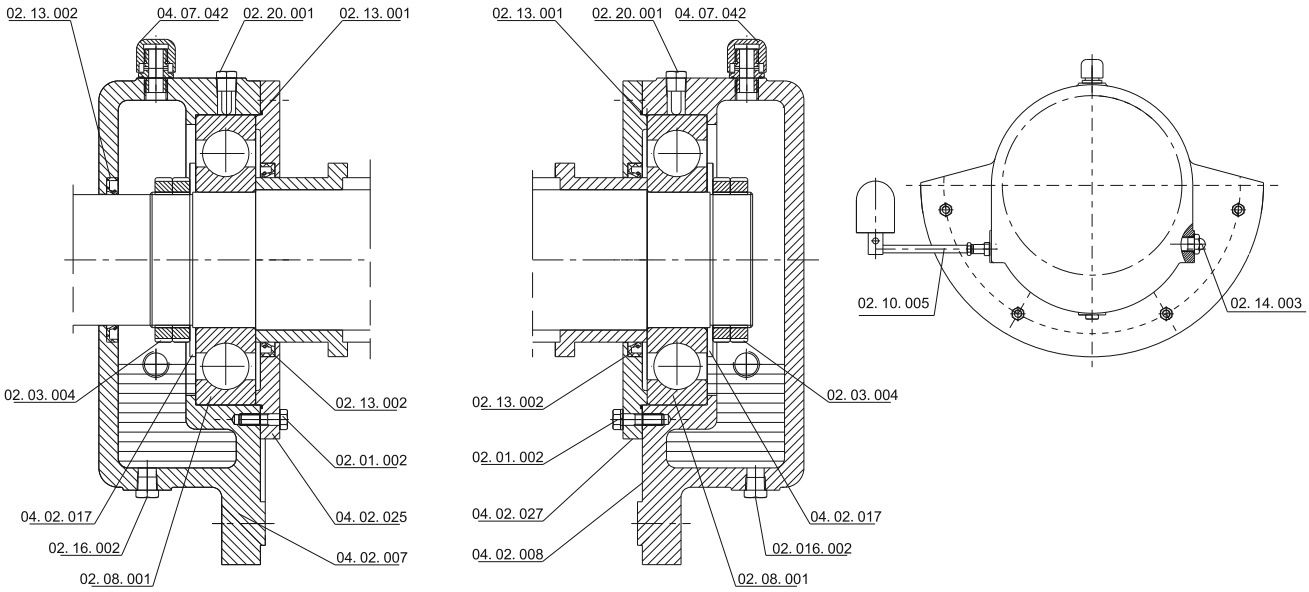

Part No.	Part Name	Part No.	Part Name	Part No.	Part Name	Part No.	Part Name
02.13.002	Lip-type seal ring	02.03.004	Round nut	04.02.017	Bearing circlip	02.16.002	Plug
02.08.001	Deep groove ball bearing	04.07.042	Breather cap	02.20.001	Temperature measuring device	02.13.001	O-Ring
02.01.002	Hex bolts	04.02.025	Bearing inner cover (DE)	04.02.007	Bearing housing (DE)	04.02.027	Bearing inner cover (NDE)
04.02.008	Bearing housing (NDE)	02.14.003	Oil sight gauge	02.10.005	Constant lever oiler		

Sectional view • Bearing with water cooling (Pumping higher temp. liquid)

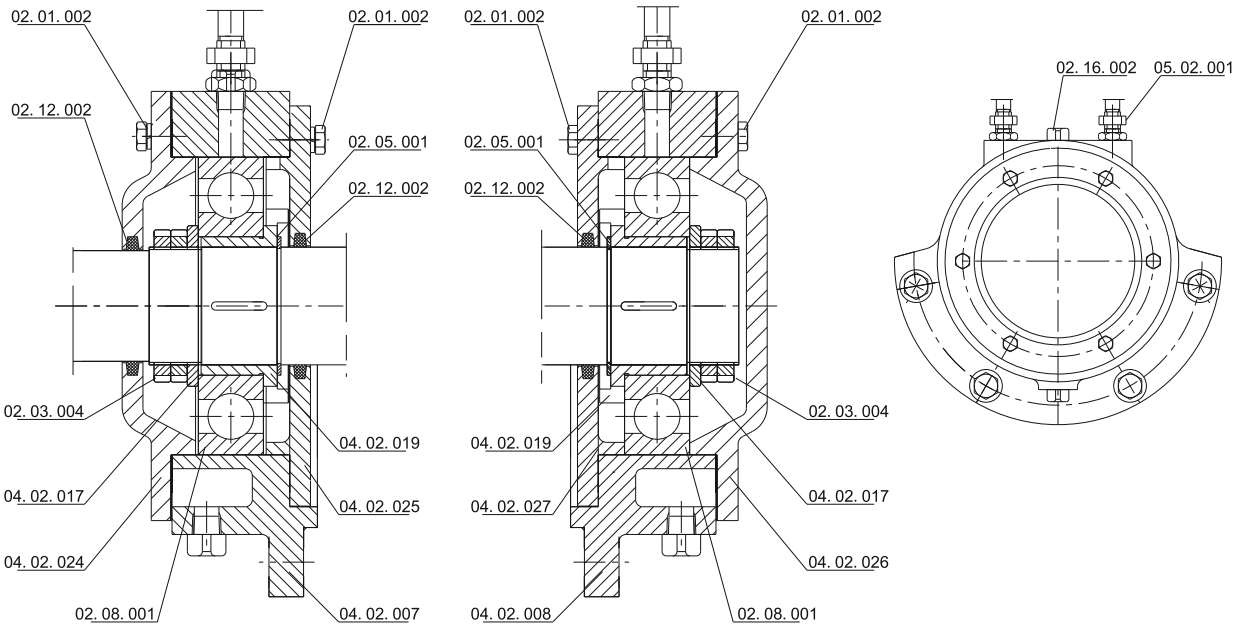

Part No.	Part Name	Part No.	Part Name	Part No.	Part Name	Part No.	Part Name
02.01.002	Hex bolts	02.12.002	Felt ring	02.03.004	Round nut	04.02.017	Bearing circlip
04.02.024	Bearing outer cover(DE)	02.08.001	Deep groove ball bearing	02.05.001	Shaft Circlip	04.02.019	Bearing sleeve
04.02.025	Bearing inner cover (DE)	04.02.007	Bearing housing (DE)	04.02.027	Bearing inner cover (NDE)	04.02.008	Bearing housing (NDE)
04.02.026	Bearing outer cover (NDE)	02.16.002	Plug	05.02.001	Cooling Piping		

Bare Shaft Pump Dimensions

Direction of Rotation: Clockwise

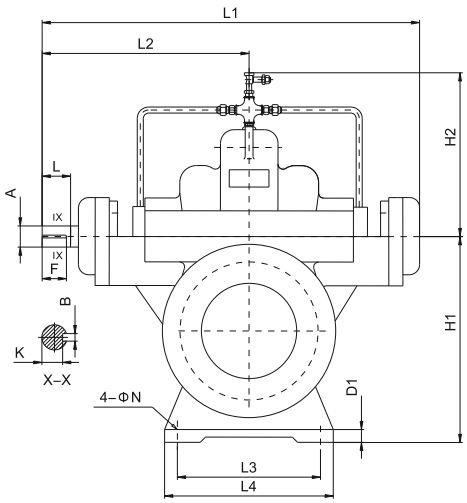

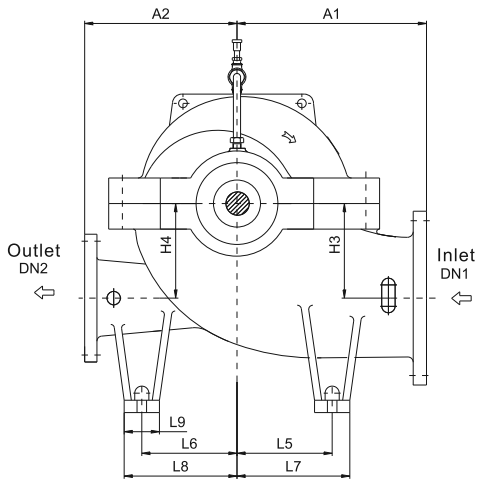

Model	Dimensions [mm]																					
	A1	A2	H1	H2	H3	H4	L1	L2	L3	L4	L5	L6	L7	L8	L9	D1	N	A	L	B	K	F
NDS125-80-210	300	300	315	270	150	150	788.9	440.5	270	320	170	170	205	205	70	30	18	35	81.5	10	30	75
NDS125-80-270	300	300	315	269	150	150	788.9	440.5	270	320	170	170	205	205	70	30	18	35	81.5	10	30	75
NDS125-80-350	330	330	315	333	140	140	788.9	440.5	270	320	170	170	210	210	80	30	18	35	81.5	10	30	75
NDS150-100-250	330	330	355	328	170	170	788.9	440.5	270	320	200	200	240	240	80	30	18	35	81.5	10	30	75
NDS150-100-320	330	330	355	342	170	170	788.9	440.5	270	320	200	200	240	240	80	30	18	35	81.5	10	30	75
NDS150-100-400	370	370	355	260	170	170	788.9	440.5	270	320	200	200	245	245	90	30	18	35	81.5	10	30	75
NDS200-125-240	370	370	400	300	200	200	871	500	380	430	200	200	240	240	80	22	25	45	111.5	14	39.5	105
NDS200-125-300	370	370	400	325	200	200	871	500	380	430	225	225	265	265	80	22	25	45	111.5	14	39.5	105
NDS200-125-380	395	370	400	350	200	200	871	500	340	390	225	225	265	265	80	30	25	45	111.5	14	39.5	105
NDS200-125-480	450	450	400	389	200	200	871	500	340	390	280	280	320	320	80	30	25	45	111.5	14	39.5	105
NDS200-150-290	400	400	400	340	200	200	871	500	380	430	225	225	265	265	80	30	25	45	111.5	14	39.5	105
NDS200-150-360	400	400	400	380	200	200	871	500	380	430	225	225	265	265	80	30	25	45	111.5	14	39.5	105
NDS200-150-460	450	450	400	390	200	200	1006.1	569.3	430	480	280	280	320	320	80	30	25	55	112.7	16	49	100
NDS200-150-570	600	500	500	460	300	300	1006.1	569.3	430	480	350	350	400	400	100	30	25	55	112.7	16	49	100
NDS250-200-340	450	450	500	368	240	240	1006.1	569.3	430	480	280	280	320	320	80	25	25	55	112.7	16	49	100
NDS250-200-430	500	500	500	400	240	240	1006.1	569.3	430	480	280	280	325	325	90	30	25	55	112.7	16	49	100
NDS250-200-530	600	600	560	470	300	300	1110.8	637.3	430	480	350	350	400	400	100	30	25	65	143.2	18	58	135
NDS250-200-660	650	550	600	525	350	350	1110.8	637.3	440	520	350	350	400	400	100	30	25	65	143.2	18	58	135
NDS300-250-270	500	450	600	404	300	300	1006.1	569.3	430	480	300	270	340	310	80	30	25	55	112.7	16	49	100
NDS300-250-280	500	450	600	404	300	300	1006.1	569.3	430	480	300	270	340	310	80	30	25	55	112.7	16	49	100
NDS300-250-390	500	500	600	417	300	300	1110.8	637.3	430	480	350	350	400	400	100	42	25	65	143.2	18	58	135
NDS300-250-490	550	550	600	583	300	300	1316.5	737.5	520	600	350	350	400	400	100	35	25	75	143.5	20	67.5	135
NDS300-250-610	650	550	630	640	350	350	1316.5	737.5	520	600	350	350	400	400	100	42	25	75	143.5	20	67.5	135
NDS300-250-780	700	600	750	600	400	400	1533	870	600	700	350	350	425	425	150	42	25	85	172.5	22	76	165
NDS350-300-310	600	520	630	465	300	300	1110.8	637.3	480	560	350	300	415	365	130	35	25	65	143.2	18	58	135
NDS350-300-330	600	520	630	465	300	300	1110.8	637.3	480	560	350	300	415	365	130	35	25	65	143.2	18	58	135

Bare Shaft Pump Dimensions

Direction of Rotation: Clockwise

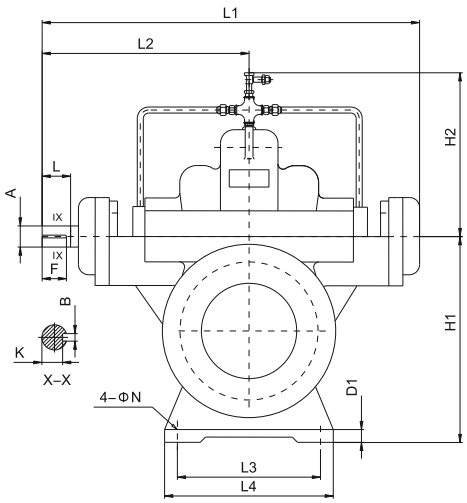

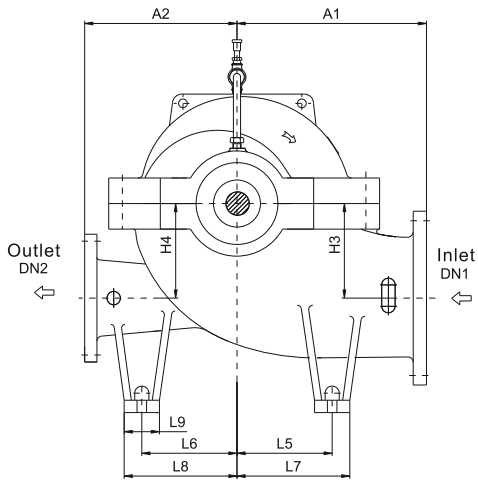

Model	Dimensions [mm]																					
	A1	A2	H1	H2	H3	H4	L1	L2	L3	L4	L5	L6	L7	L8	L9	D1	N	A	L	B	K	F
NDS400-300-450	650	550	700	590	350	350	1316.5	737.5	520	600	350	350	400	400	100	40	25	75	143.5	20	67.5	135
NDS400-300-570	700	650	710	530	350	350	1527	870	520	600	475	475	525	525	100	40	25	85	172.5	22	76	165
NDS400-300-700	700	650	750	530	400	400	1527	870	600	700	425	425	485	485	120	40	25	85	172.5	22	76	165
NDS400-350-360	670	570	670	513	350	350	1316.5	737.5	630	710	330	330	380	380	100	35	25	75	143.5	20	67.5	135
NDS400-350-380	670	570	670	513	350	350	1316.5	737.5	630	710	330	330	380	380	100	35	25	75	143.5	20	67.5	135
NDS400-350-520	700	650	750	535	400	400	1527	870	520	600	475	475	525	525	100	35	25	85	172.5	22	76	165
NDS450-450-350	700	550	700	520	370	370	1308.5	737.5	700	800	330	330	380	380	100	35	25	75	143.5	20	67.5	135
NDS500-300-920	900	900	850	615	400	400	1909	1088	780	940	500	500	620	620	240	40	42	115	210	32	104	180
NDS500-300-780	800	750	800	535	400	400	1900	1055	580	740	450	450	570	570	240	45	35	115	210	30	104	180
NDS500-400-400	765	600	785	537	420	400	1438.5	821.5	560	640	400	400	460	460	120	35	30	75	143.5	20	67.5	135
NDS500-400-420	765	600	785	537	420	400	1438.5	821.5	560	640	400	400	460	460	120	35	30	75	143.5	20	67.5	135
NDS500-400-540	700	700	820	600	420	420	1773	1009	780	940	400	400	520	520	240	40	35	100	210	28	90	180
NDS500-400-570	700	700	820	600	420	420	1468	821	780	940	400	400	520	520	240	40	35	75	143.5	20	67.5	135
NDS500-400-660	850	750	850	641	450	450	1773	1009	780	940	500	400	620	520	240	40	35	100	210	28	90	180
NDS500-400-675	850	750	850	641	450	450	1527	870	780	940	500	400	620	520	240	40	35	85	172.5	22	76	165
NDS600-400-740	990	800	1000	697	530	530	1773	1009	780	940	560	460	680	580	240	40	35	100	210	28	90	180
NDS600-400-850	1030	880	1000	600	500	500	2009	1138	880	1060	470	470	730	730	260	50	42	115	210	32	104	180
NDS600-500-520	1020	740	970	737	550	525	1790	984	780	940	360	360	480	480	240	40	35	80	142	22	71	130
NDS600-500-550	1020	740	970	737	550	525	1790	984	780	940	360	360	480	480	240	40	35	80	142	22	71	130
NDS600-500-580	1020	740	970	737	550	525	1790	984	780	940	360	360	480	480	240	40	35	80	142	22	71	130
NDS700-500-670	1050	950	1035	725	550	550	1773	1009	780	940	625	525	750	650	250	50	42	100	210	28	90	180
NDS700-500-940	1050	950	1150	695	650	650	2308	1225	980	1100	700	600	810	710	220	50	42	130	250	32	119	245
NDS700-600-600	1050	850	1100	800	610	610	1935	1090	780	940	725	575	850	700	250	50	42	100	210	28	90	180
NDS700-600-680	1150	850	1100	800	610	610	1935	1090	780	940	725	575	850	700	250	50	42	100	210	28	90	180
NDS700-600-740	1160	1100	1120	725	570	570	1909	1088	880	1060	630	630	760	760	260	50	42	115	210	32	104	180
NDS800-700-750	1315	1250	1250	870	710	680	2310	1278	1000	1250	725	725	875	875	300	60	42	120	210	32	109	200

Performance Scope

3500 RPM

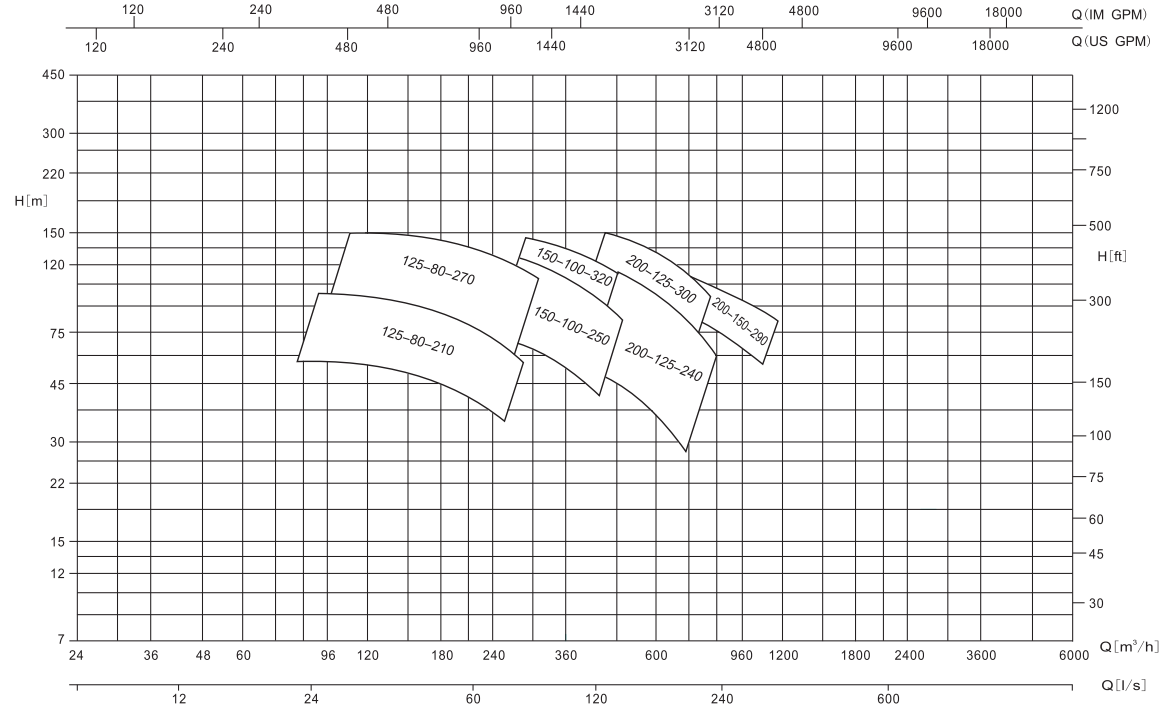

1750 RPM

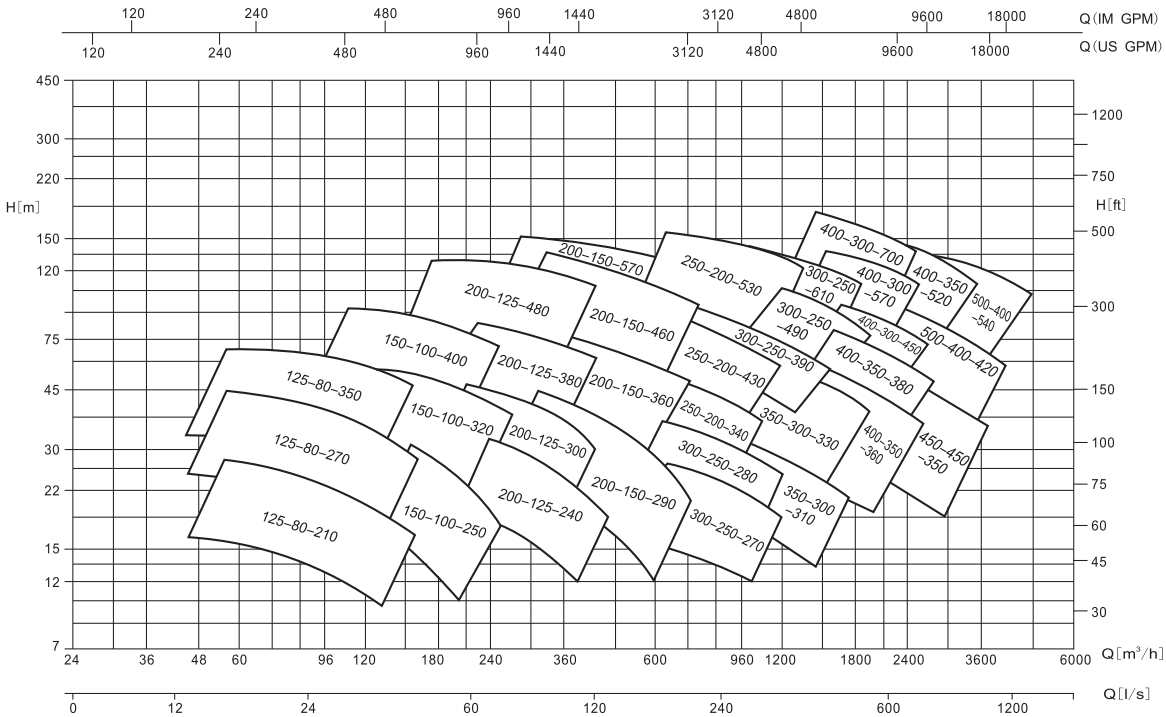

Performance Scope

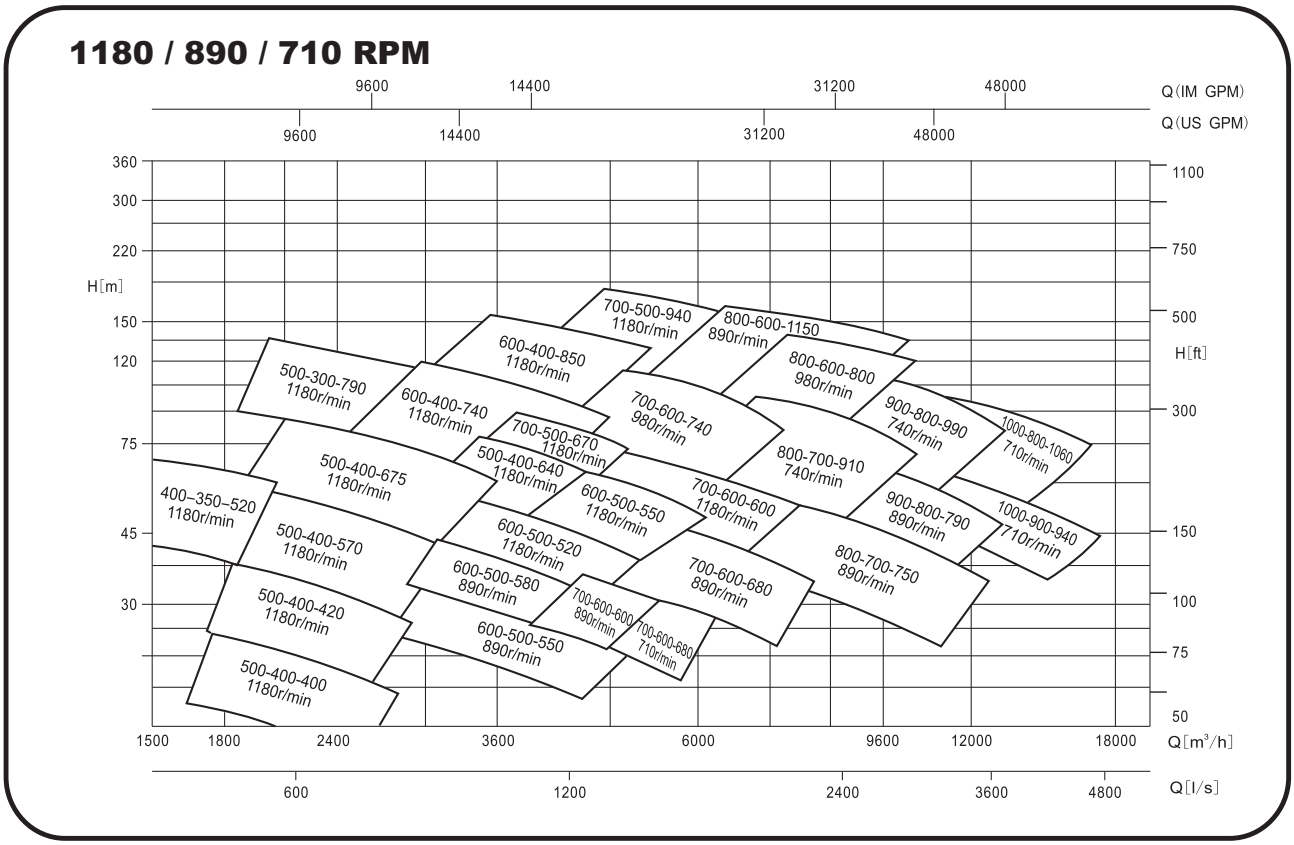

NDS 125-80-210 , n=3500RPM

Head and power ratings apply to media with a density of ρ=1kg-dm³ and a kinetic viscosity of 20mm²/s.

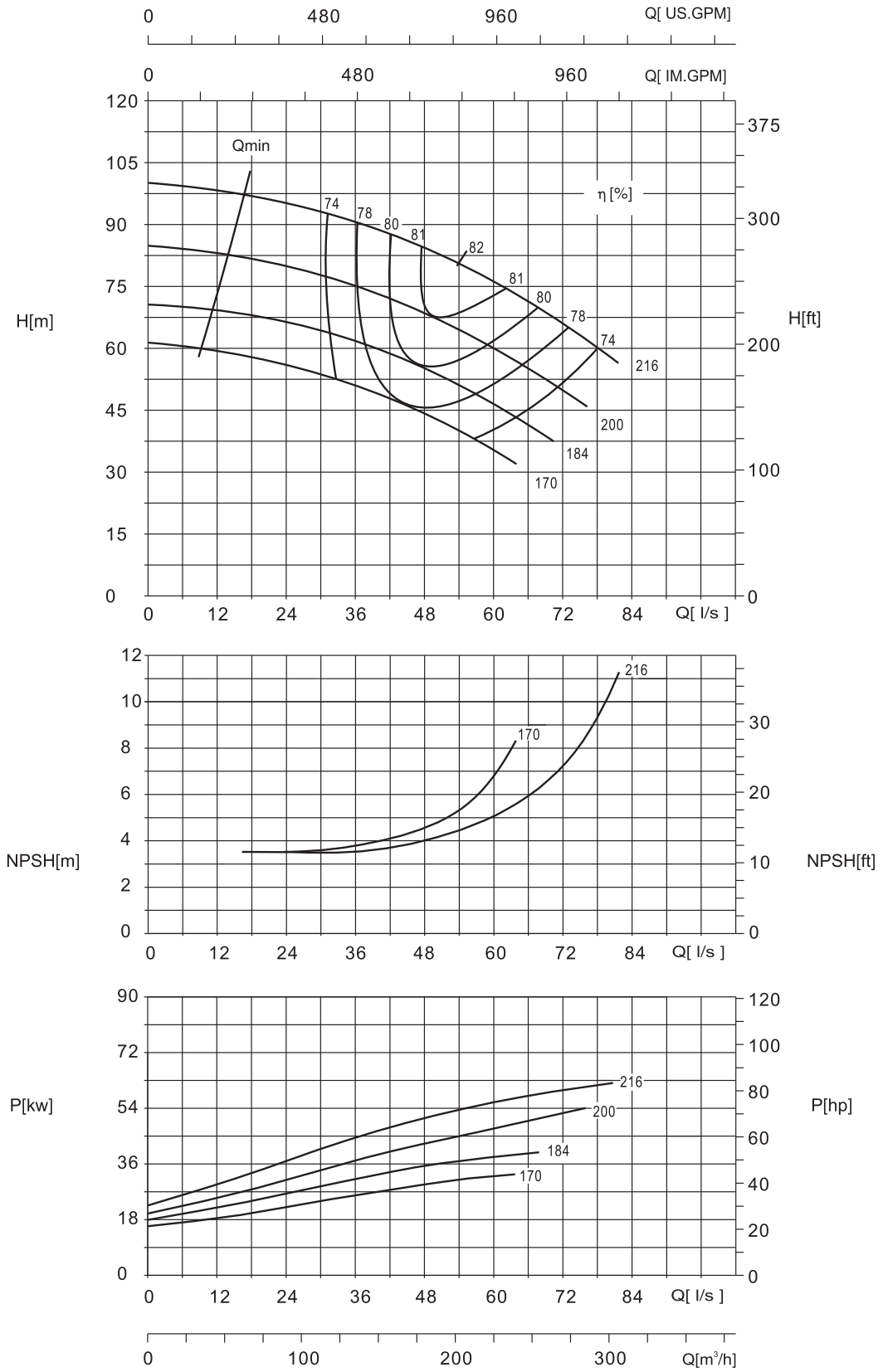

NDS 125-80-270 , n=3500RPM

Head and power ratings apply to media with a density of ρ=1kg-dm³ and a kinetic viscosity of 20mm²/s.

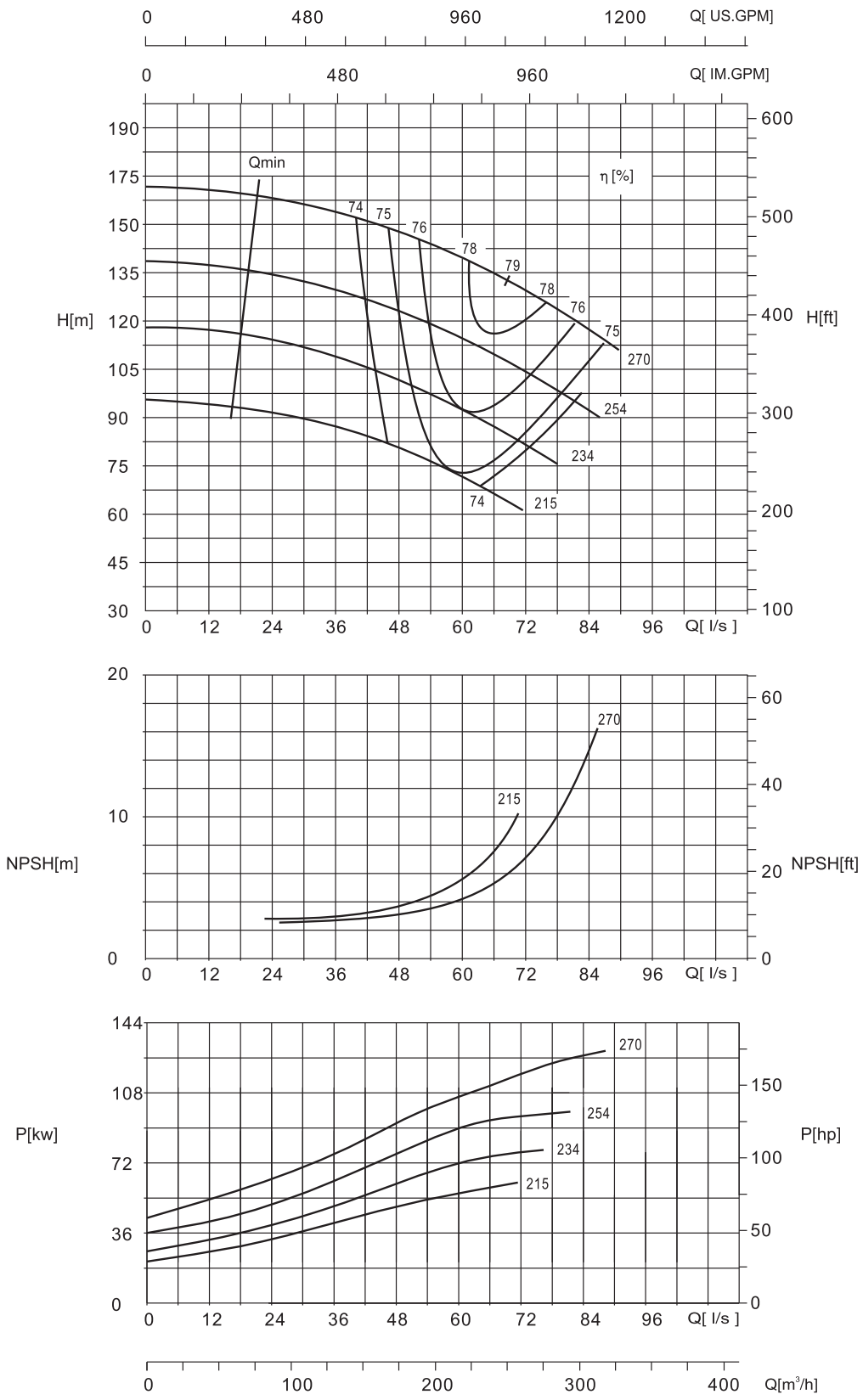

NDS 150-100-250 , n=3500RPM

Head and power ratings apply to media with a density of ρ=1kg-dm³ and a kinetic viscosity of 20mm²/s.

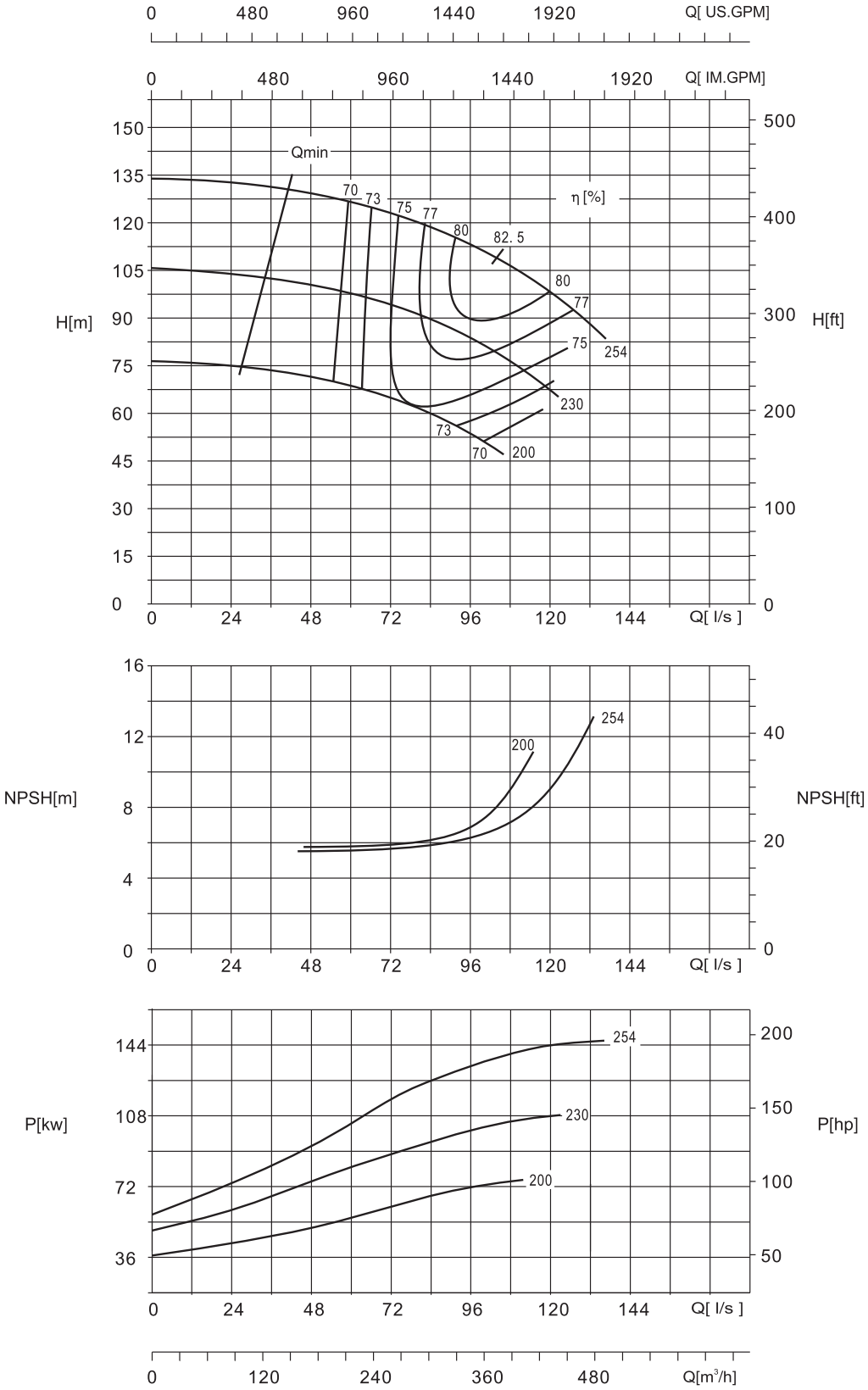

NDS 150-100-320 , n=3500RPM

Head and power ratings apply to media with a density of ρ=1kg-dm³ and a kinetic viscosity of 20mm²/s.

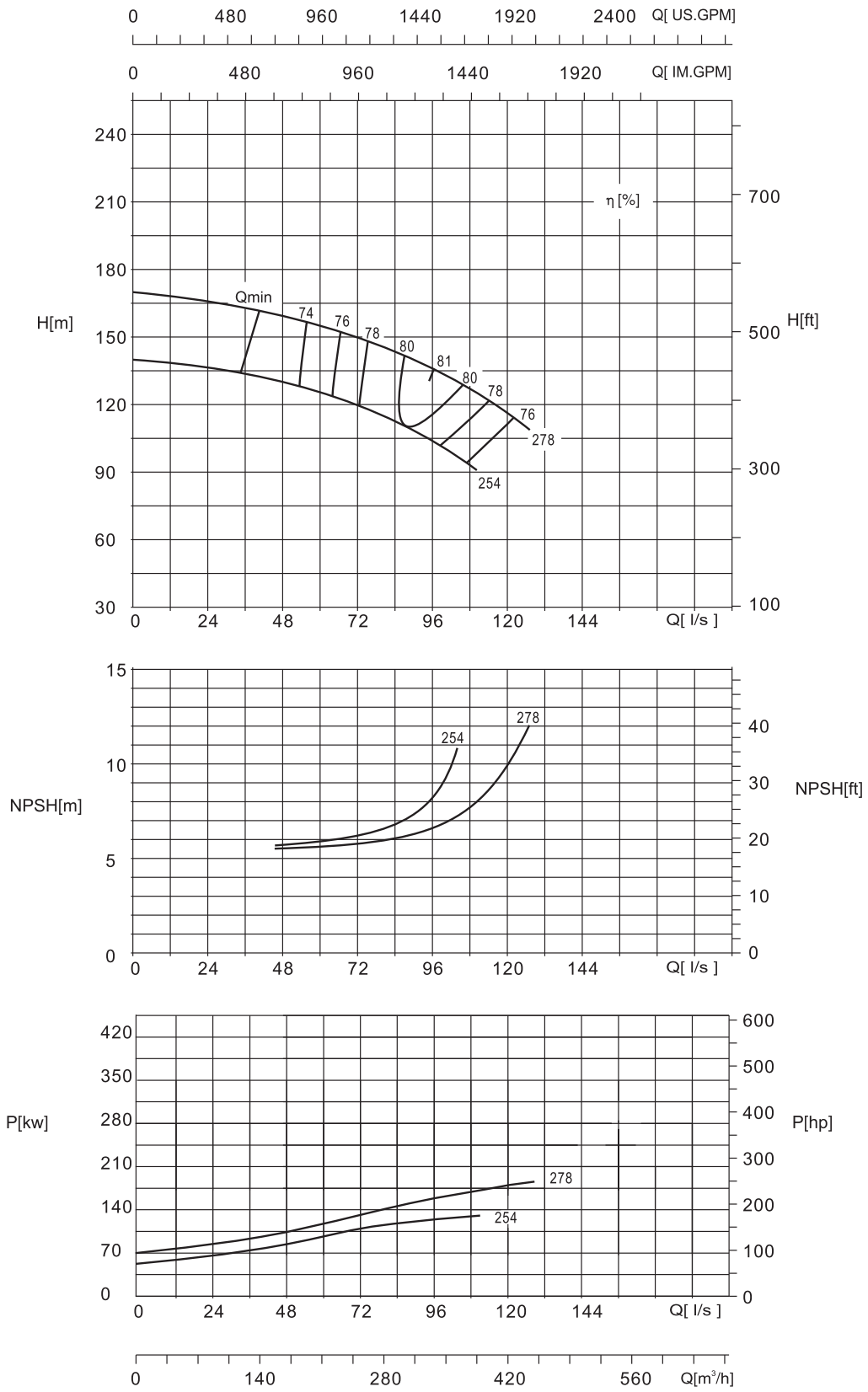

NDS 200-125-240 , n=3500RPM

Head and power ratings apply to media with a density of ρ=1kg-dm³ and a kinetic viscosity of 20mm²/s.

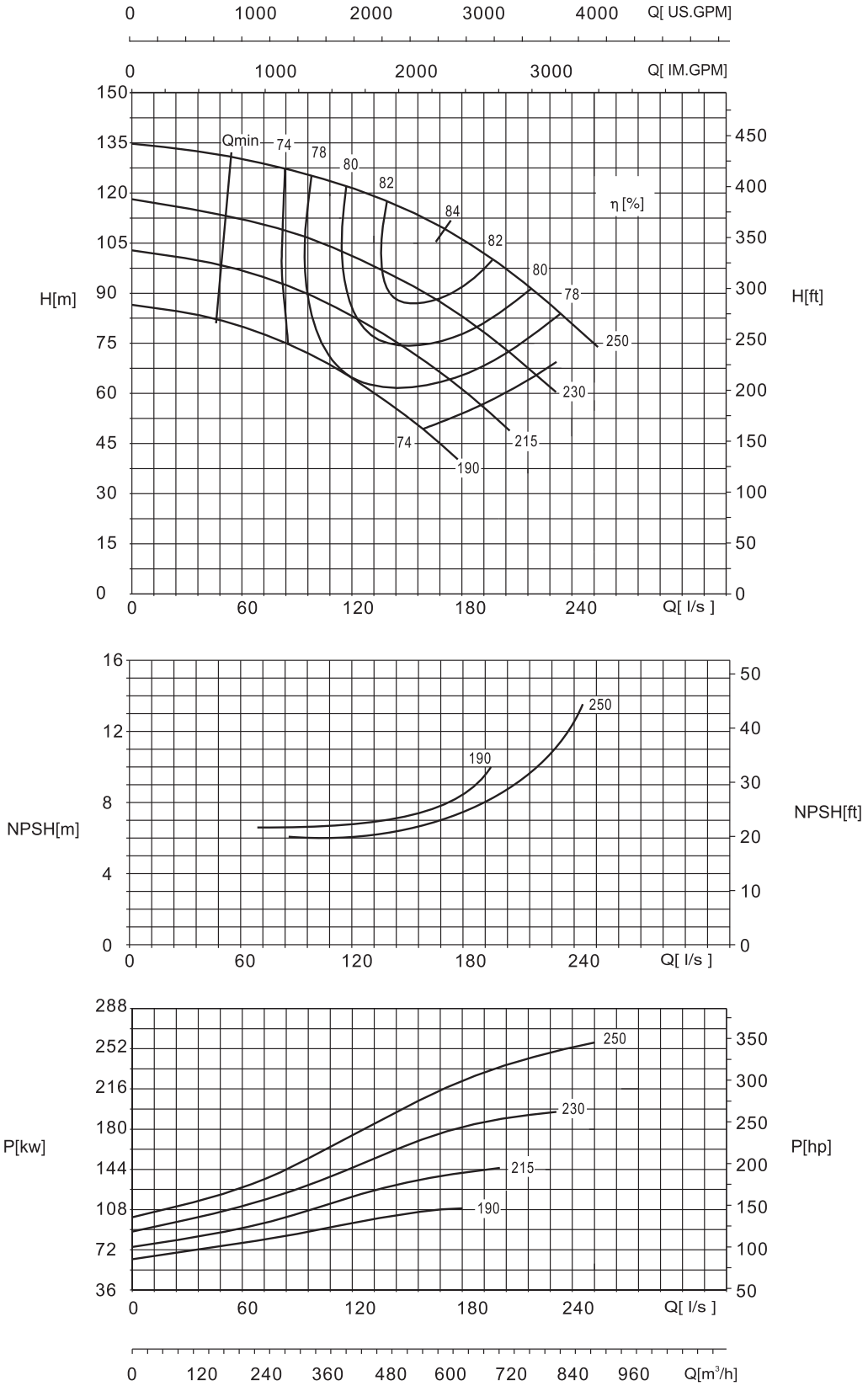

NDS 200-125-300 , n=3500RPM

Head and power ratings apply to media with a density of ρ=1kg-dm³ and a kinetic viscosity of 20mm²/s.

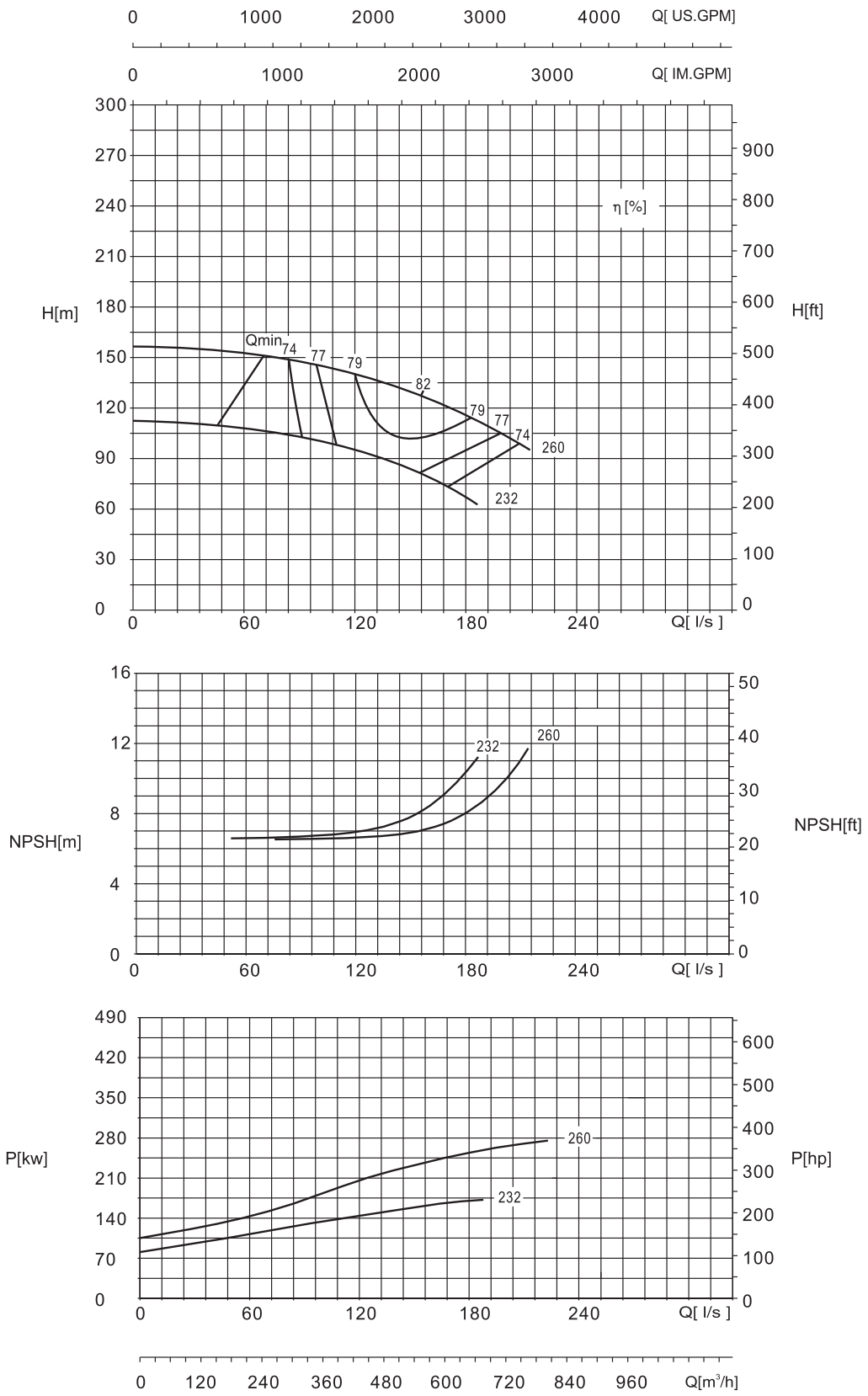

NDS 200-150-290 , n=3500RPM

Head and power ratings apply to media with a density of ρ=1kg-dm³ and a kinetic viscosity of 20mm²/s.

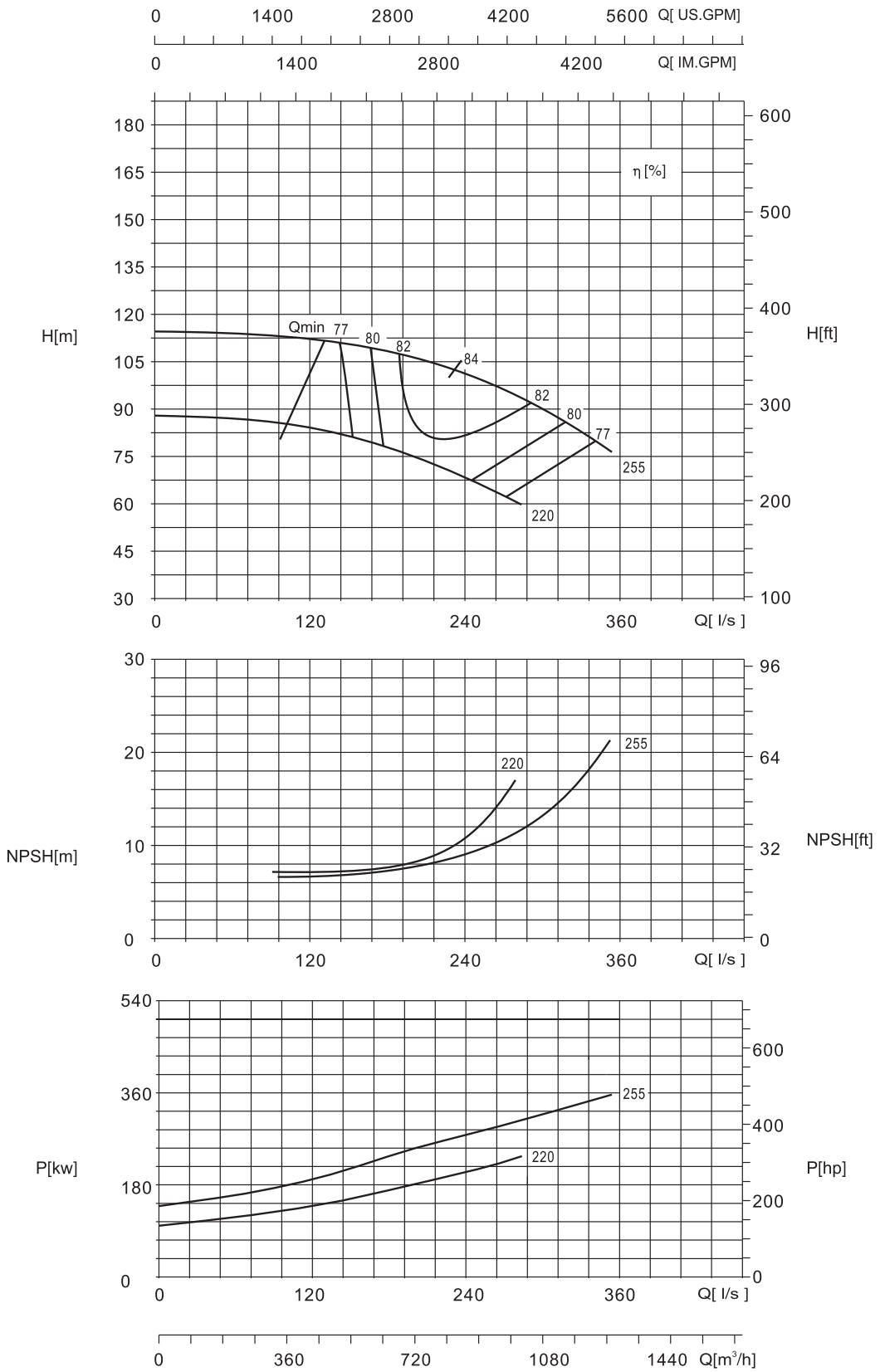

NDS 125-80-210 , n=1750RPM

Head and power ratings apply to media with a density of ρ=1kg-dm³ and a kinetic viscosity of 20mm²/s.

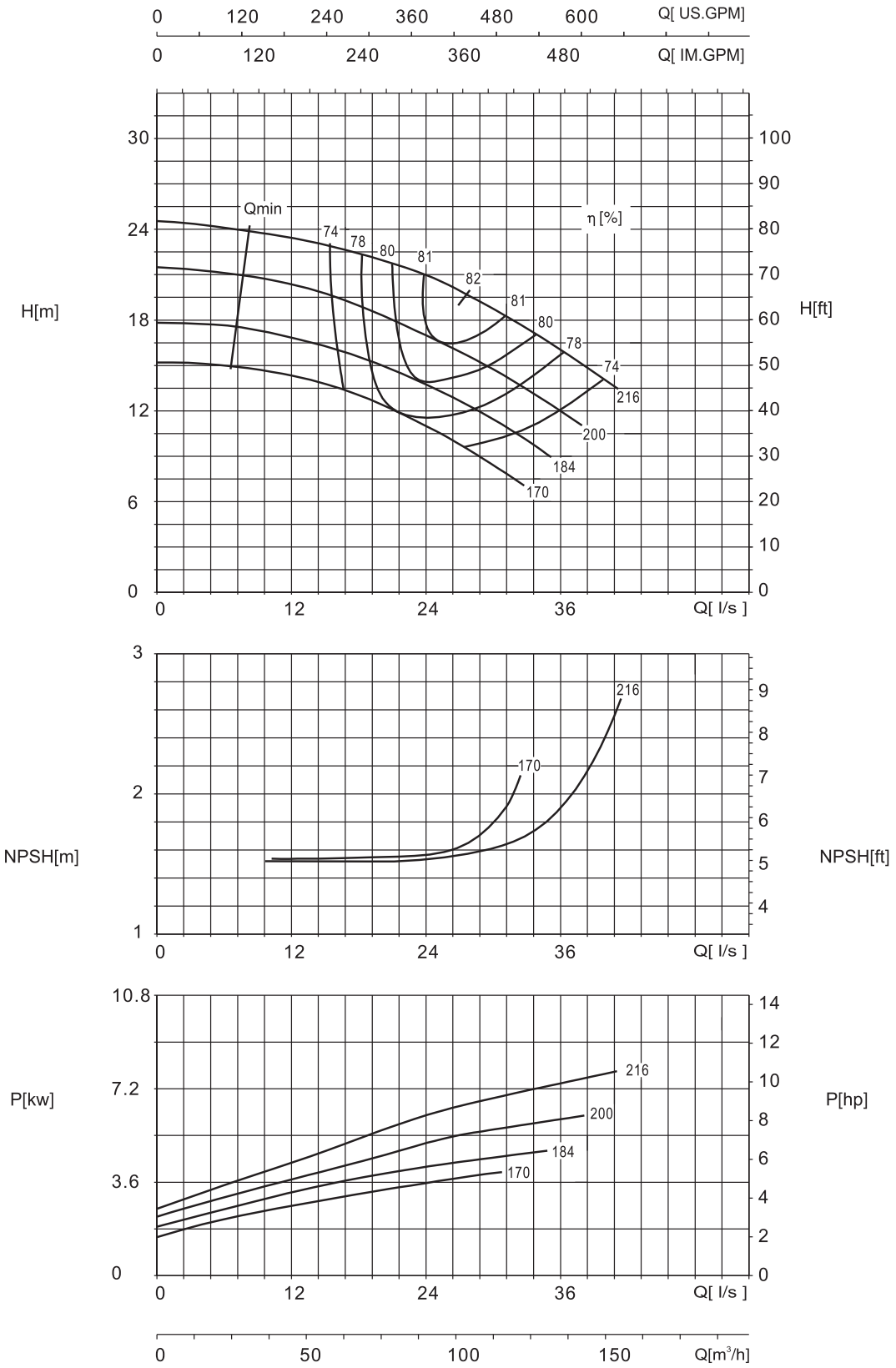

NDS 125-80-270 , n=1750RPM

Head and power ratings apply to media with a density of ρ=1kg-dm³ and a kinetic viscosity of 20mm²/s.

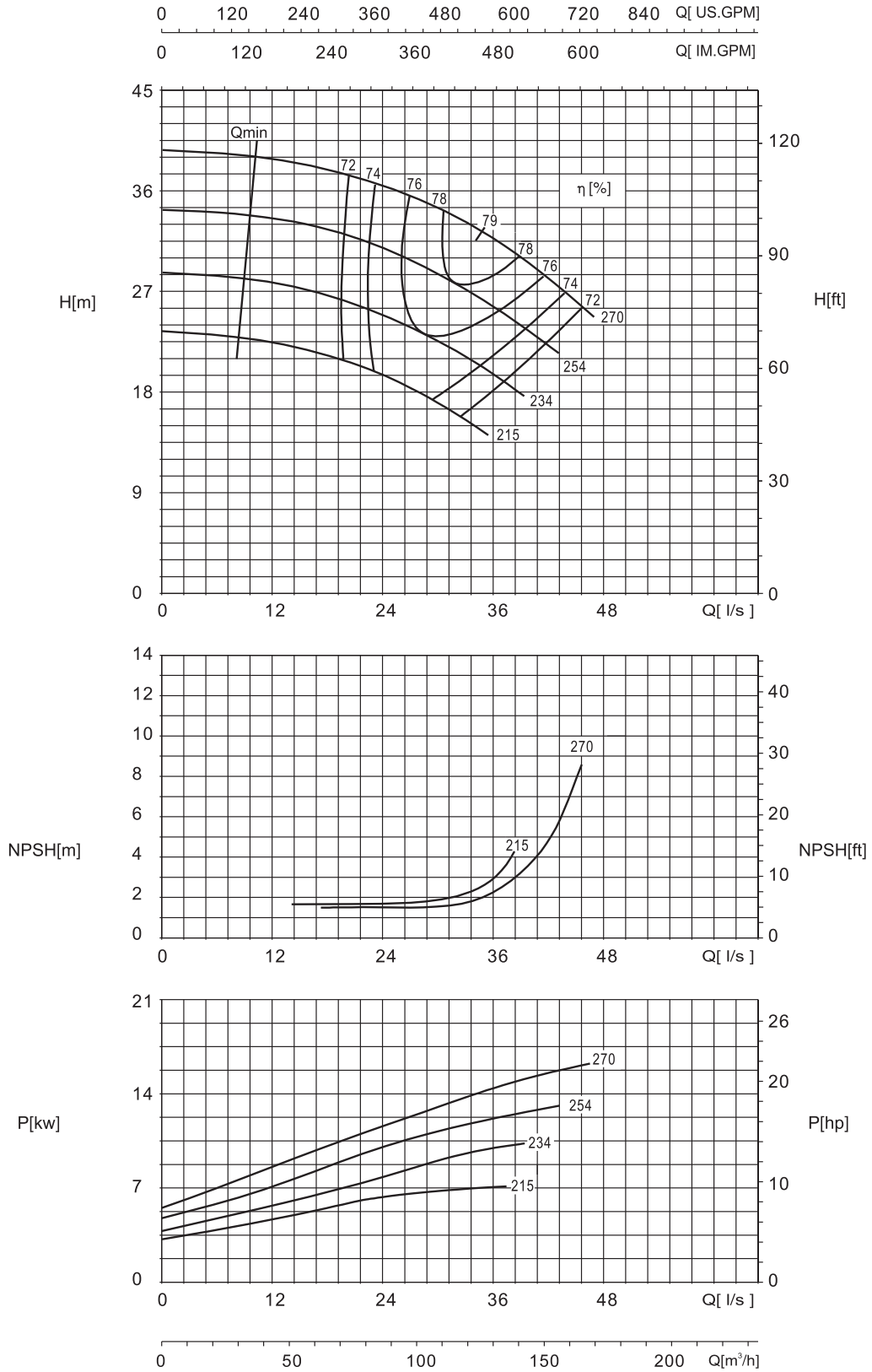

NDS 125-80-350 , n=1750RPM

Head and power ratings apply to media with a density of ρ=1kg-dm³ and a kinetic viscosity of 20mm²/s.

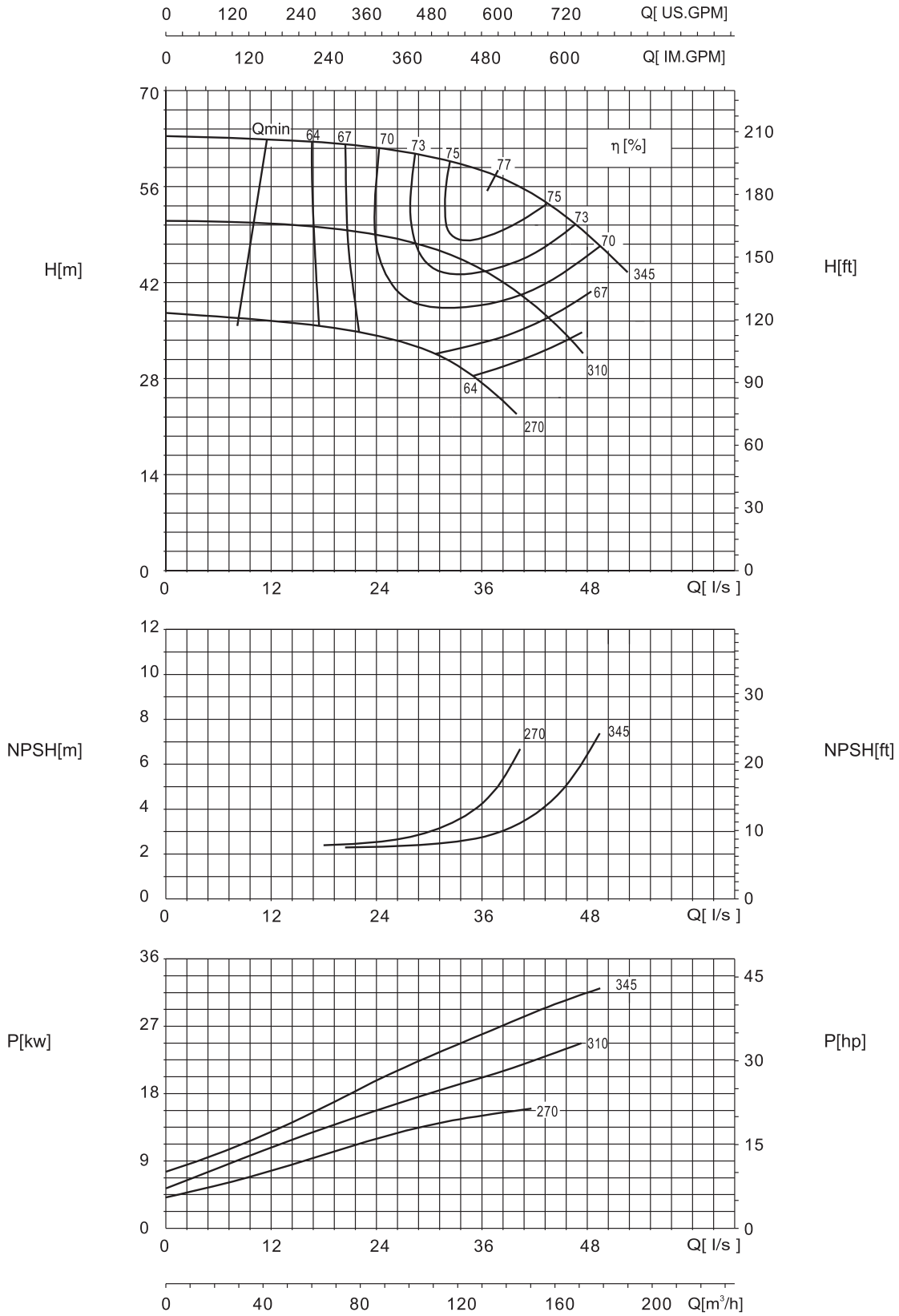

NDS 150-100-250 , n=1750RPM

Head and power ratings apply to media with a density of ρ=1kg-dm³ and a kinetic viscosity of 20mm²/s.

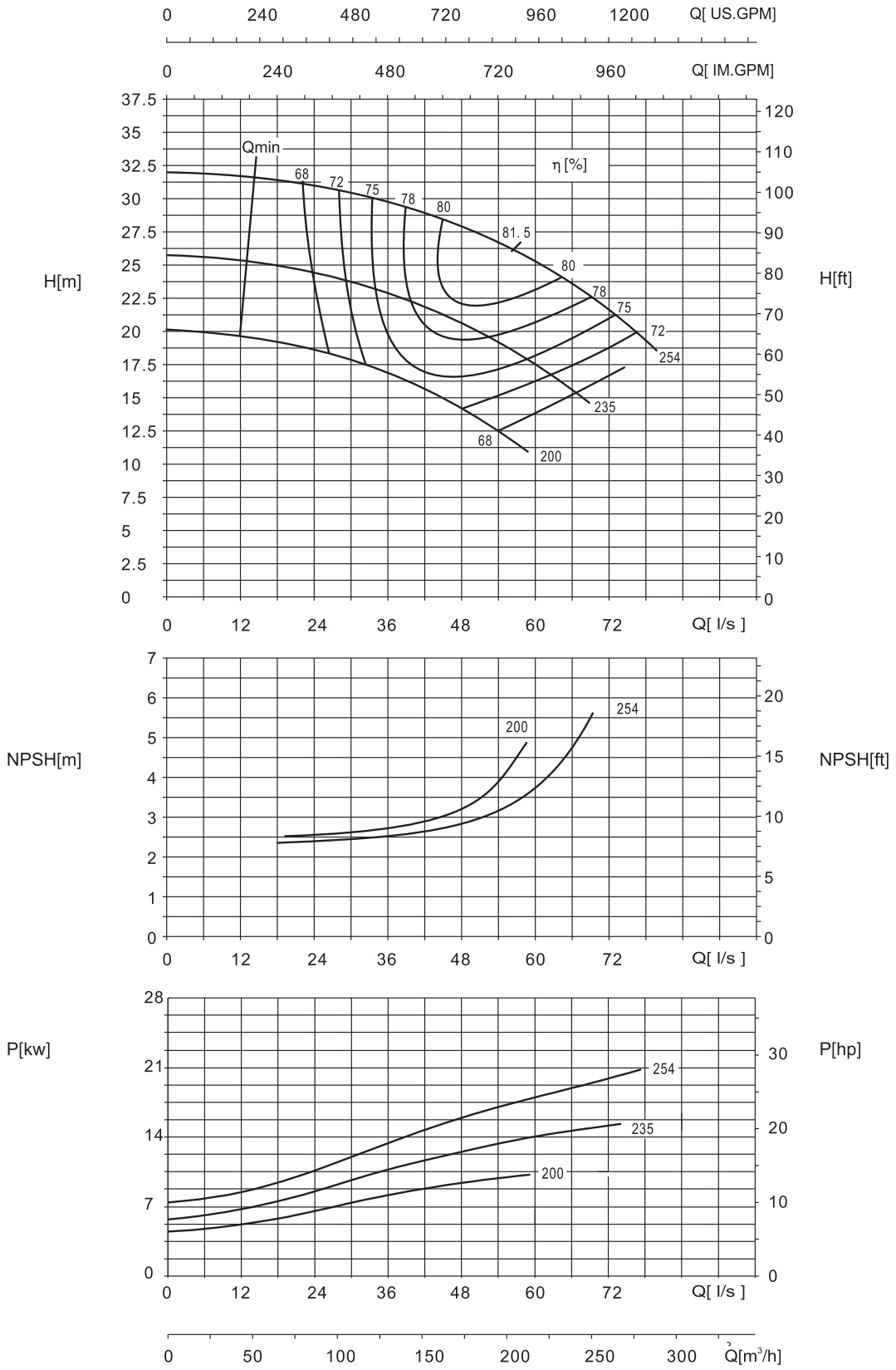

NDS 150-100-320 , n=1750RPM

Head and power ratings apply to media with a density of ρ=1kg-dm³ and a kinetic viscosity of 20mm²/s.

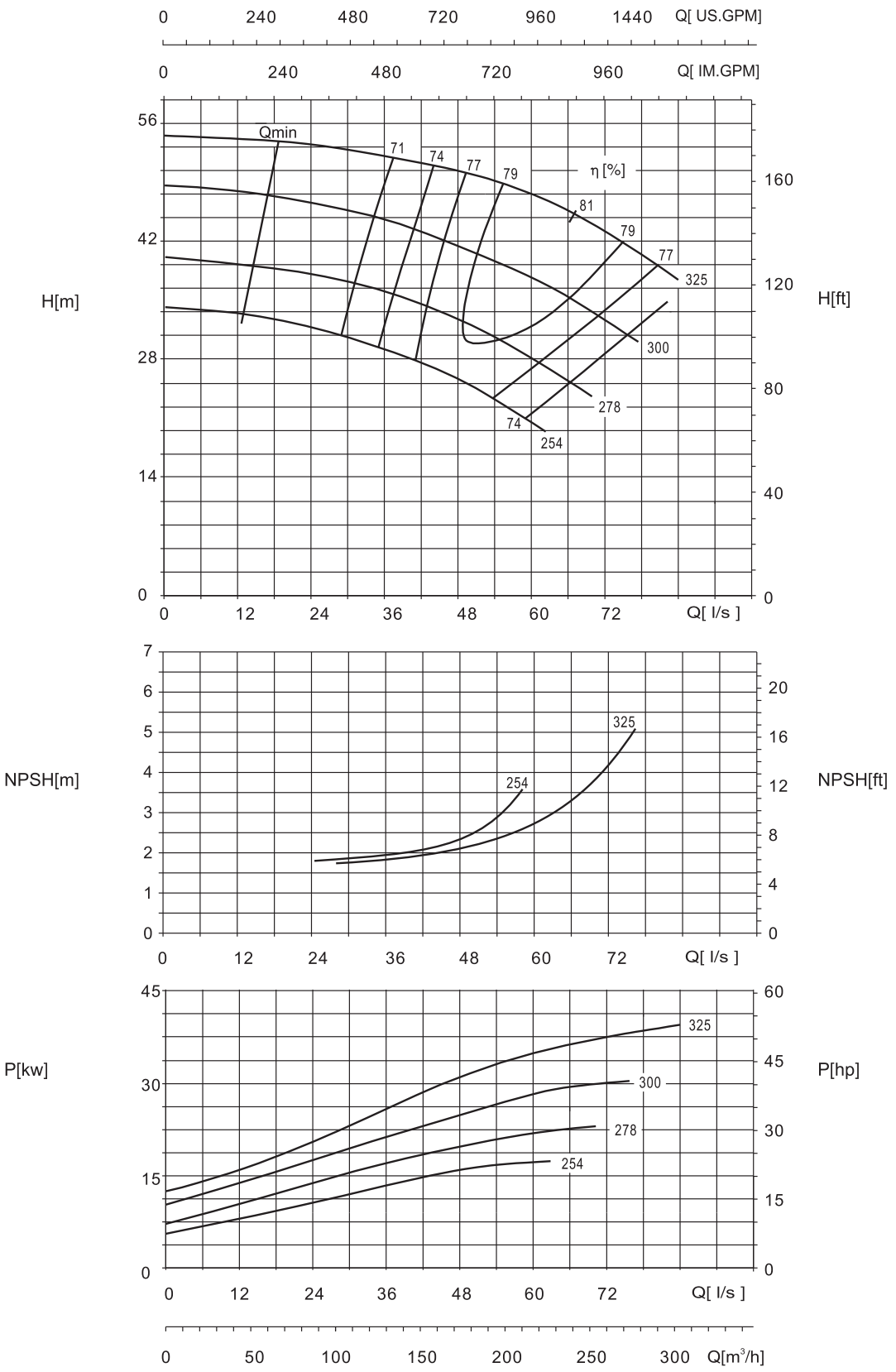

NDS 150-100-400 , n=1750RPM

Head and power ratings apply to media with a density of ρ=1kg-dm³ and a kinetic viscosity of 20mm²/s.

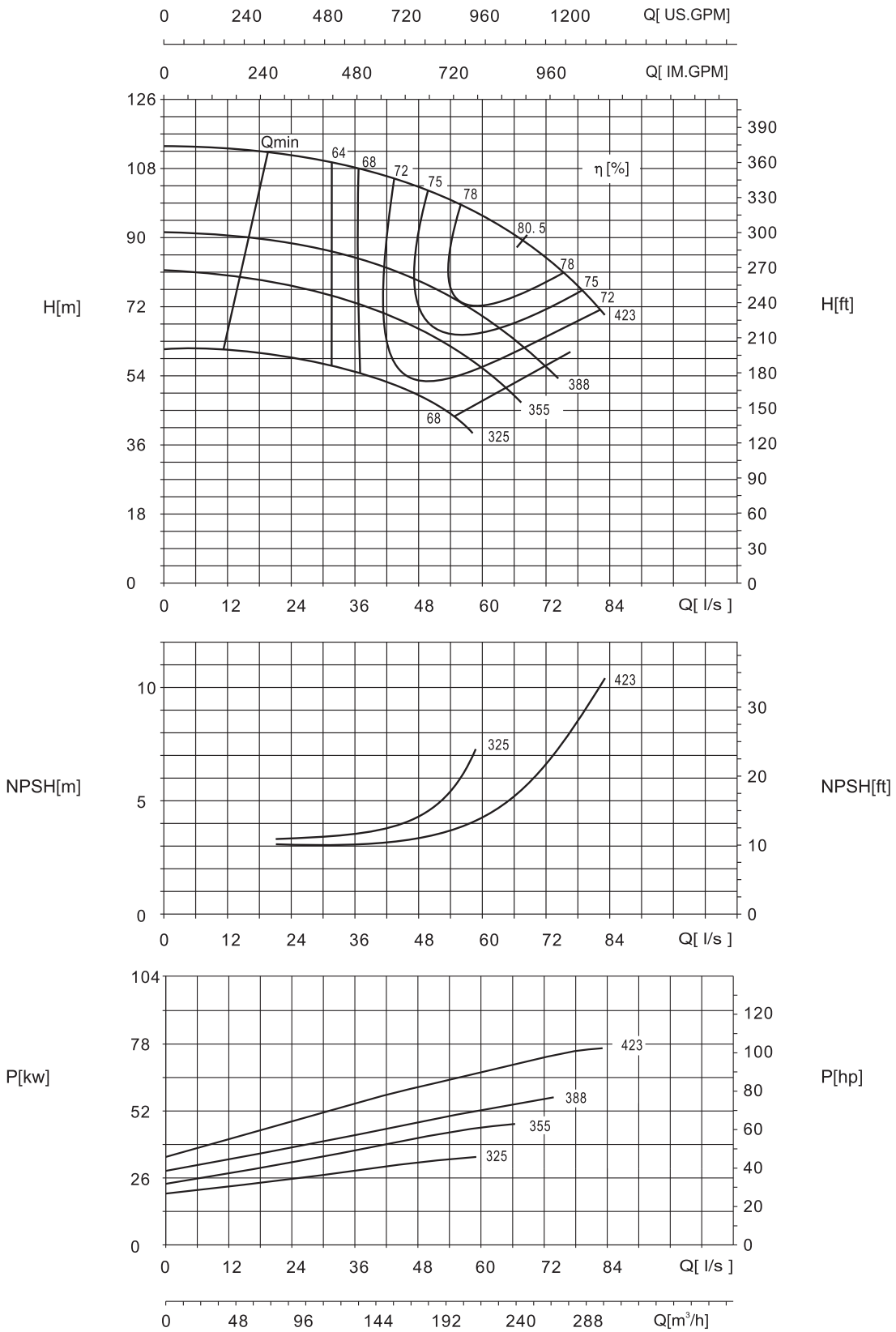

NDS 200-125-240 , n=1750RPM

Head and power ratings apply to media with a density of ρ=1kg-dm³ and a kinetic viscosity of 20mm²/s.

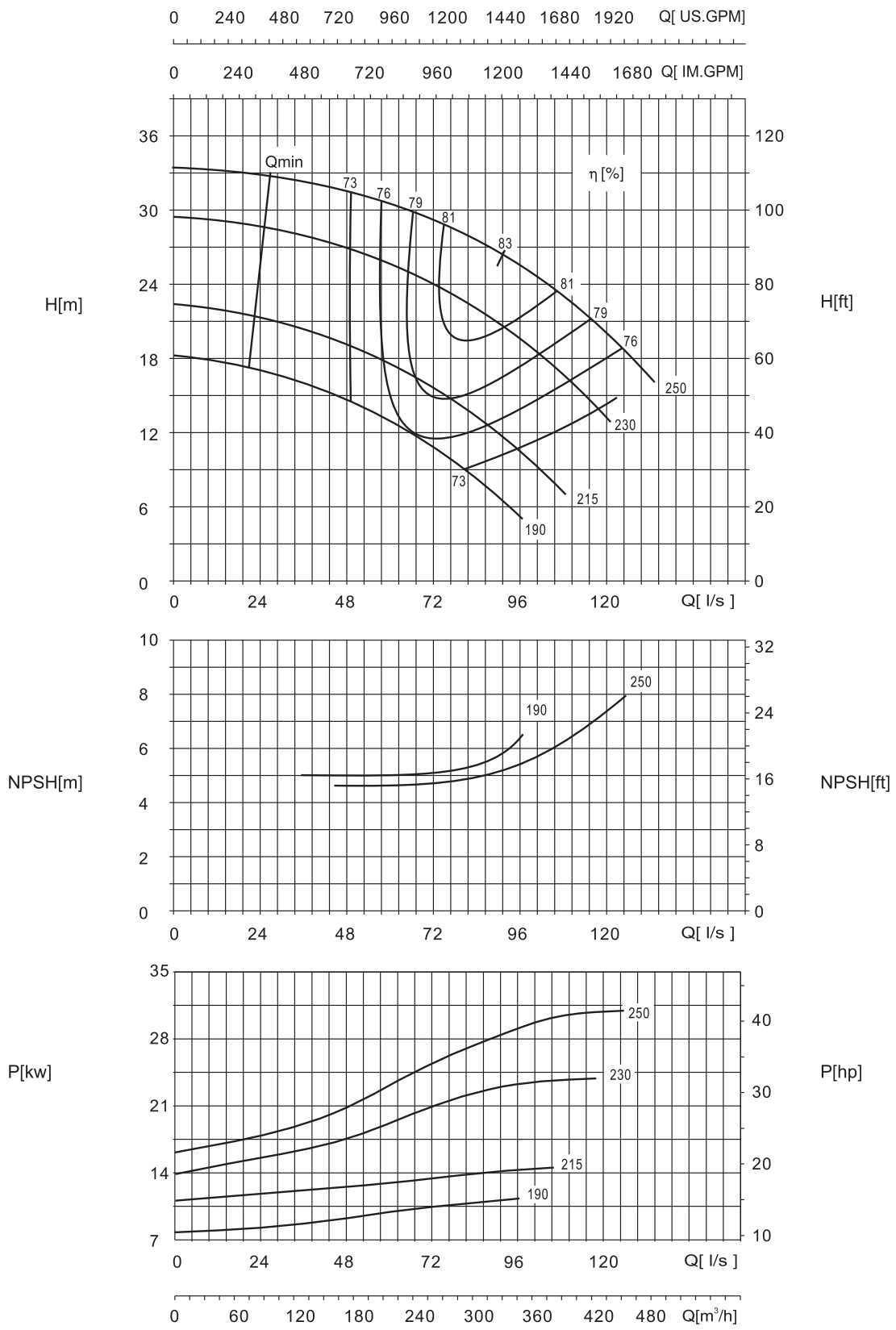

NDS 200-125-300 , n=1750RPM

Head and power ratings apply to media with a density of ρ=1kg-dm³ and a kinetic viscosity of 20mm²/s.

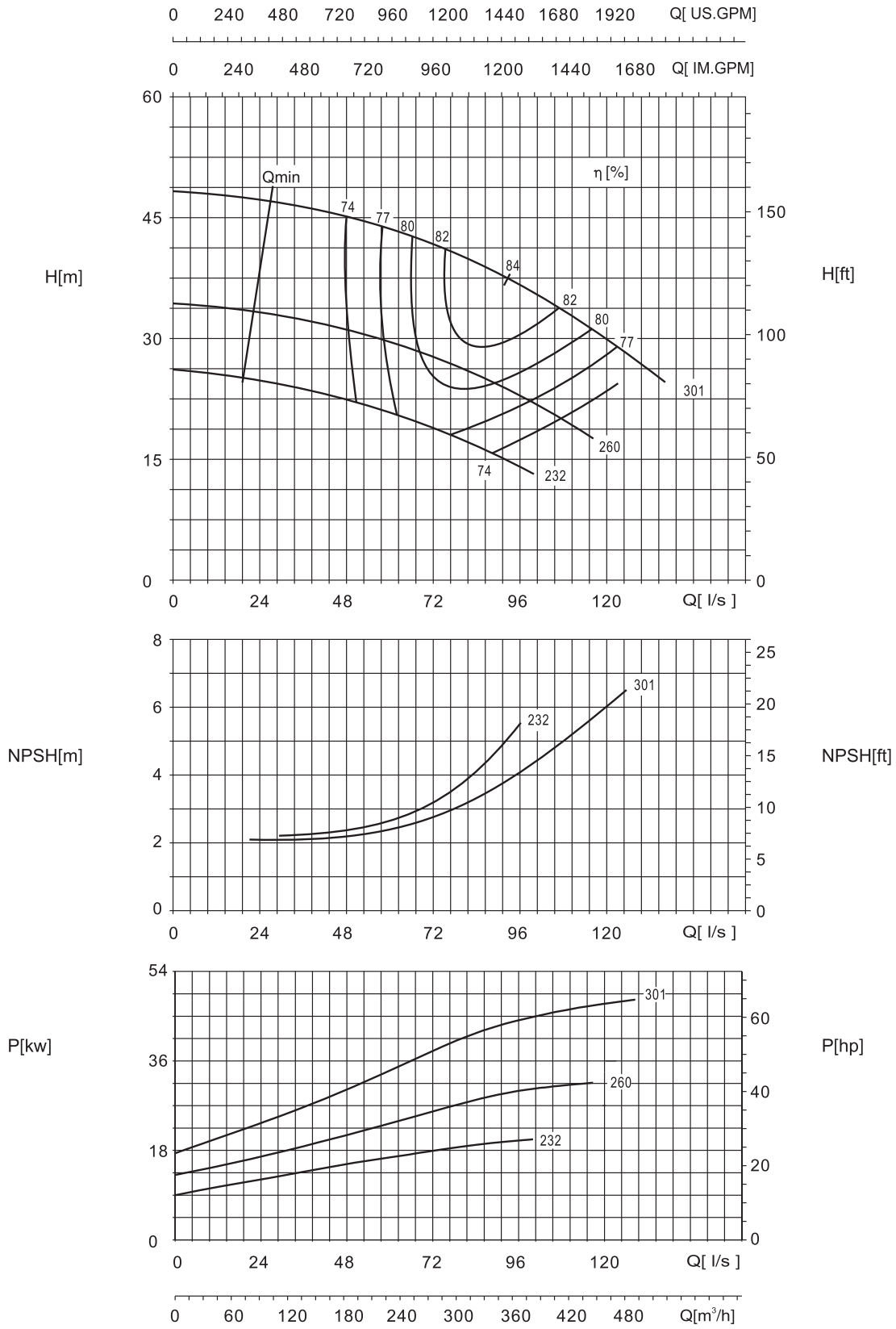

NDS 200-125-380 , n=1750RPM

Head and power ratings apply to media with a density of ρ=1kg-dm³ and a kinetic viscosity of 20mm²/s.

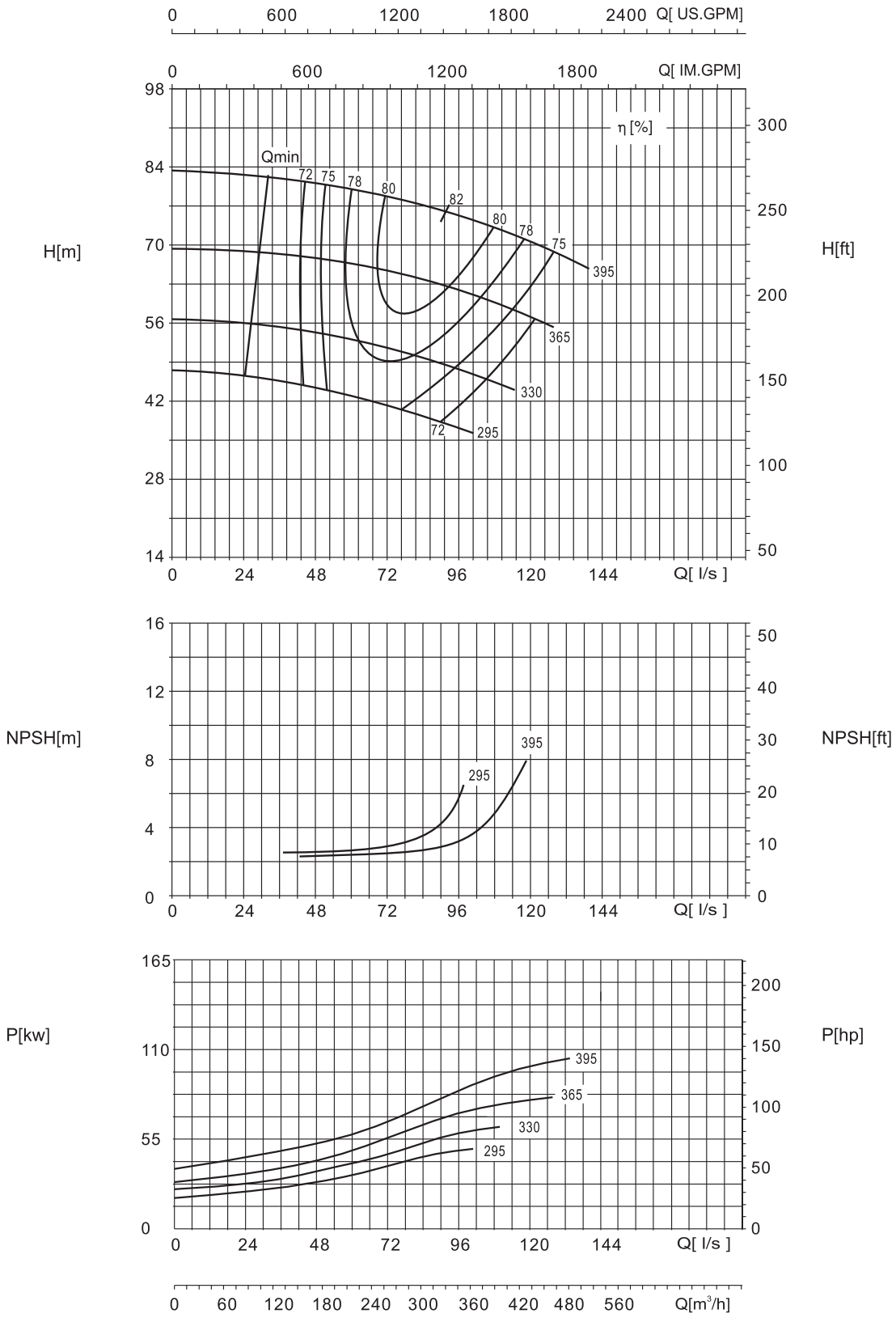

NDS 200-125-480 , n=1750RPM

Head and power ratings apply to media with a density of ρ=1kg-dm³ and a kinetic viscosity of 20mm²/s.

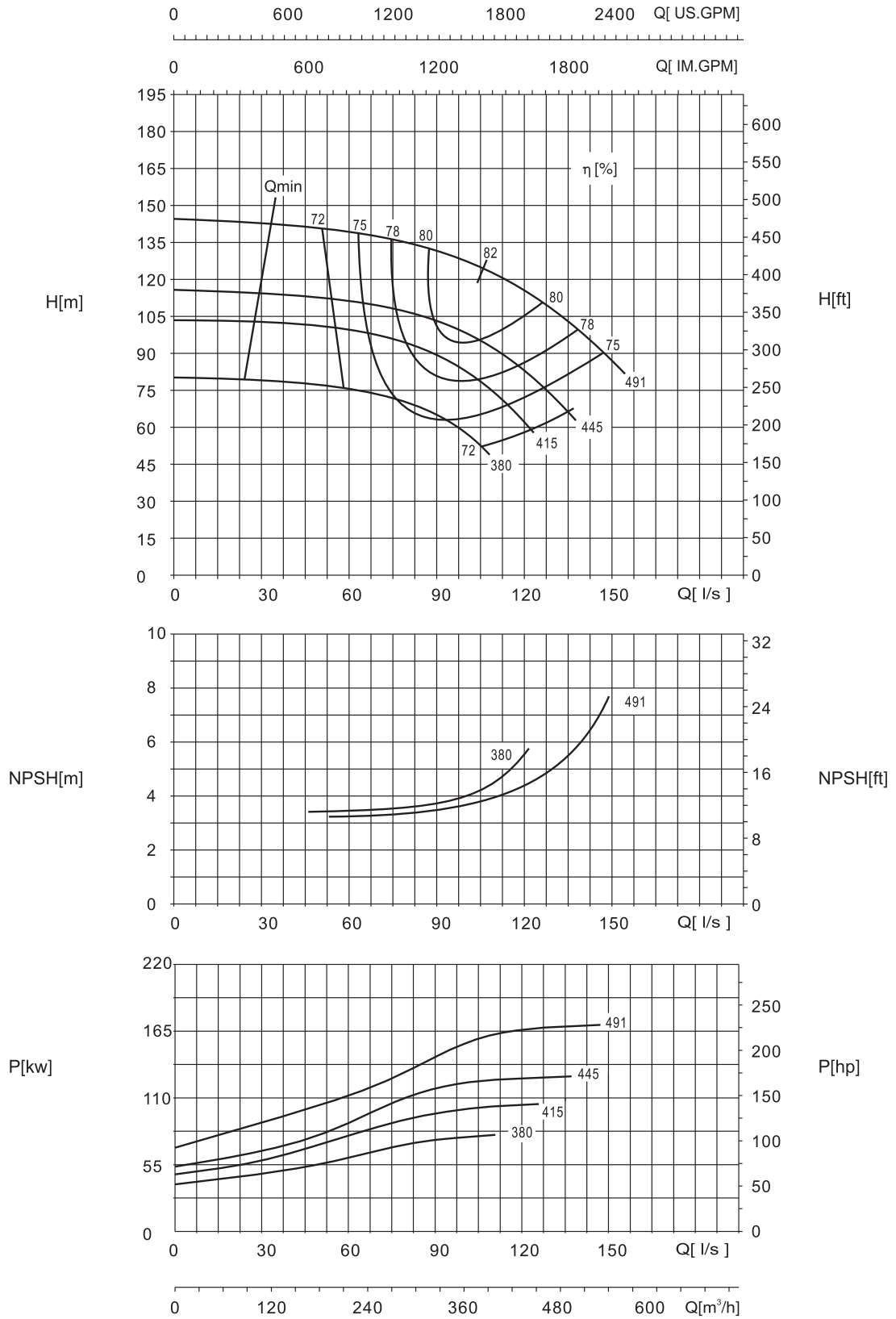

NDS 200-150-290 , n=1750RPM

Head and power ratings apply to media with a density of ρ=1kg-dm³ and a kinetic viscosity of 20mm²/s.

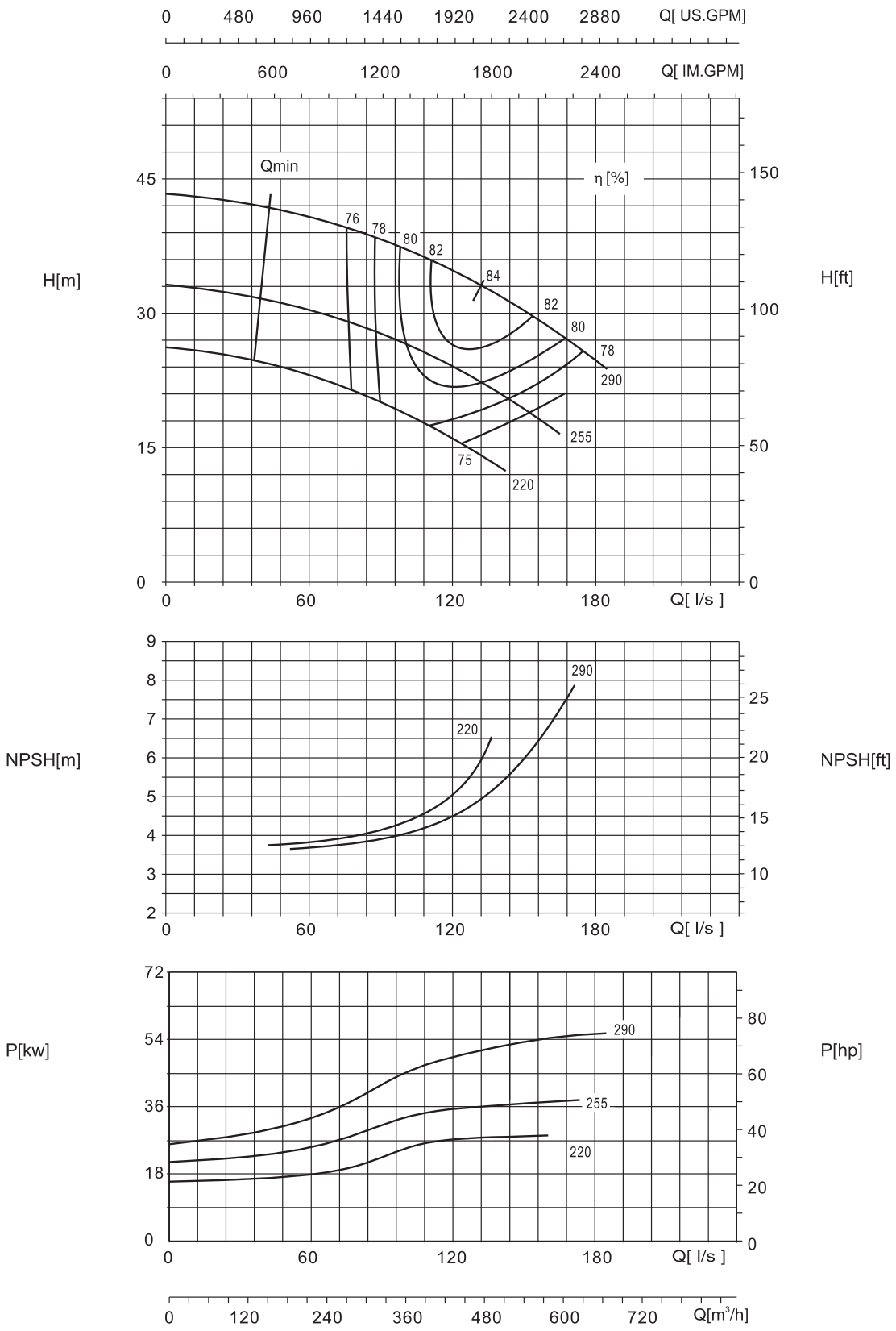

NDS 200-150-360 , n=1750RPM

Head and power ratings apply to media with a density of ρ=1kg-dm³ and a kinetic viscosity of 20mm²/s.

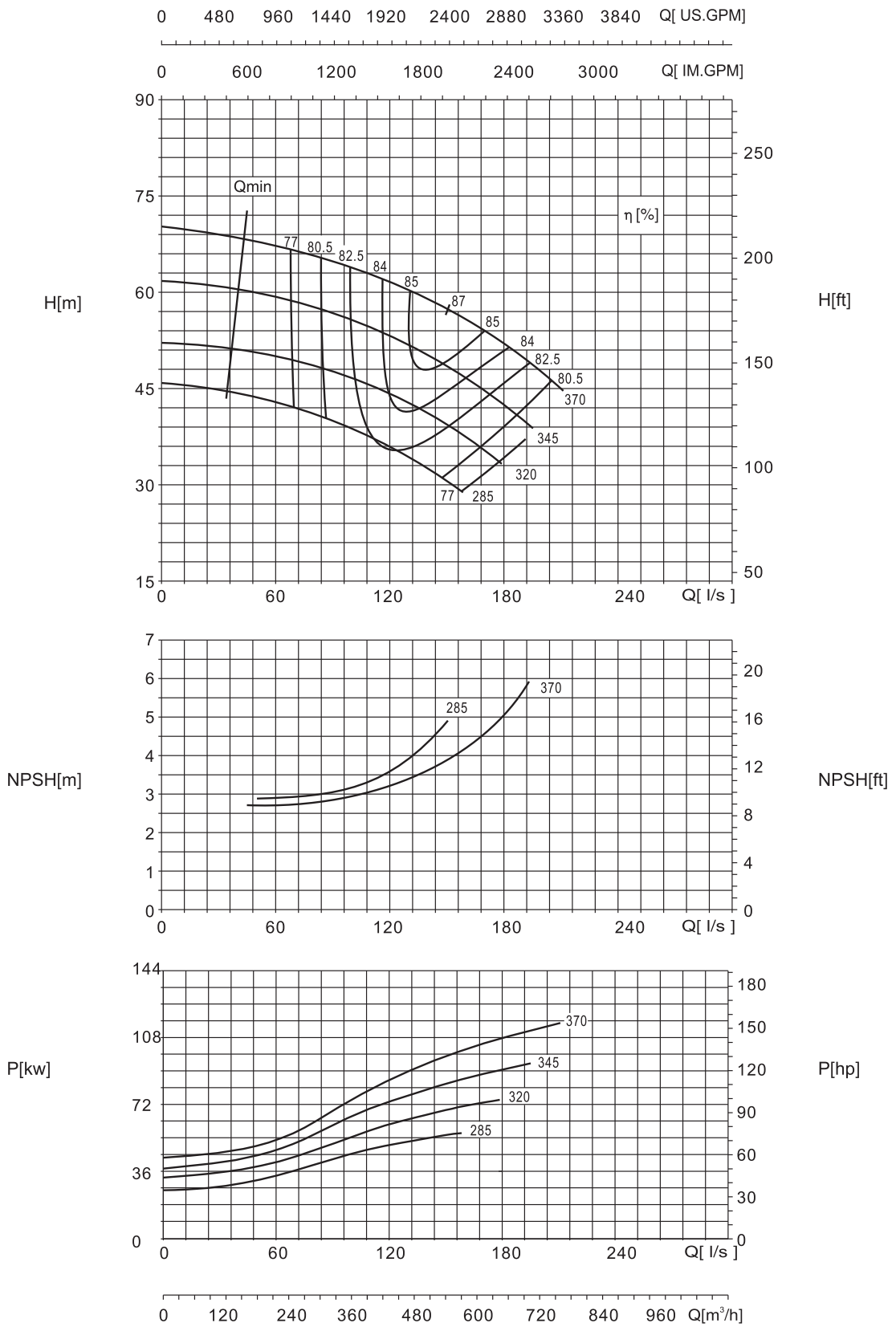

NDS 200-150-460 , n=1750RPM

Head and power ratings apply to media with a density of ρ=1kg-dm³ and a kinetic viscosity of 20mm²/s.

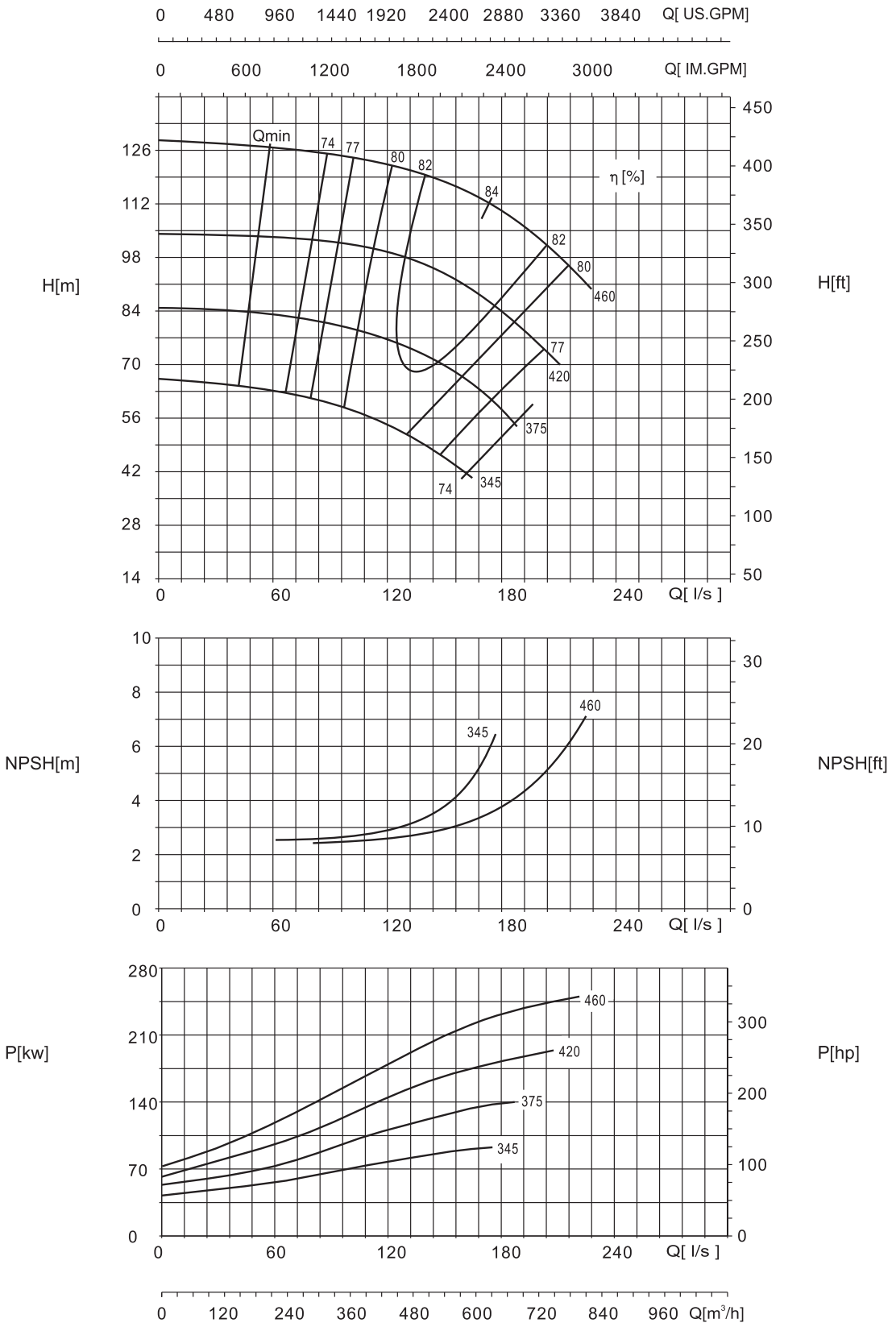

NDS 200-150-570 , n=1750RPM

Head and power ratings apply to media with a density of ρ=1kg-dm³ and a kinetic viscosity of 20mm²/s.

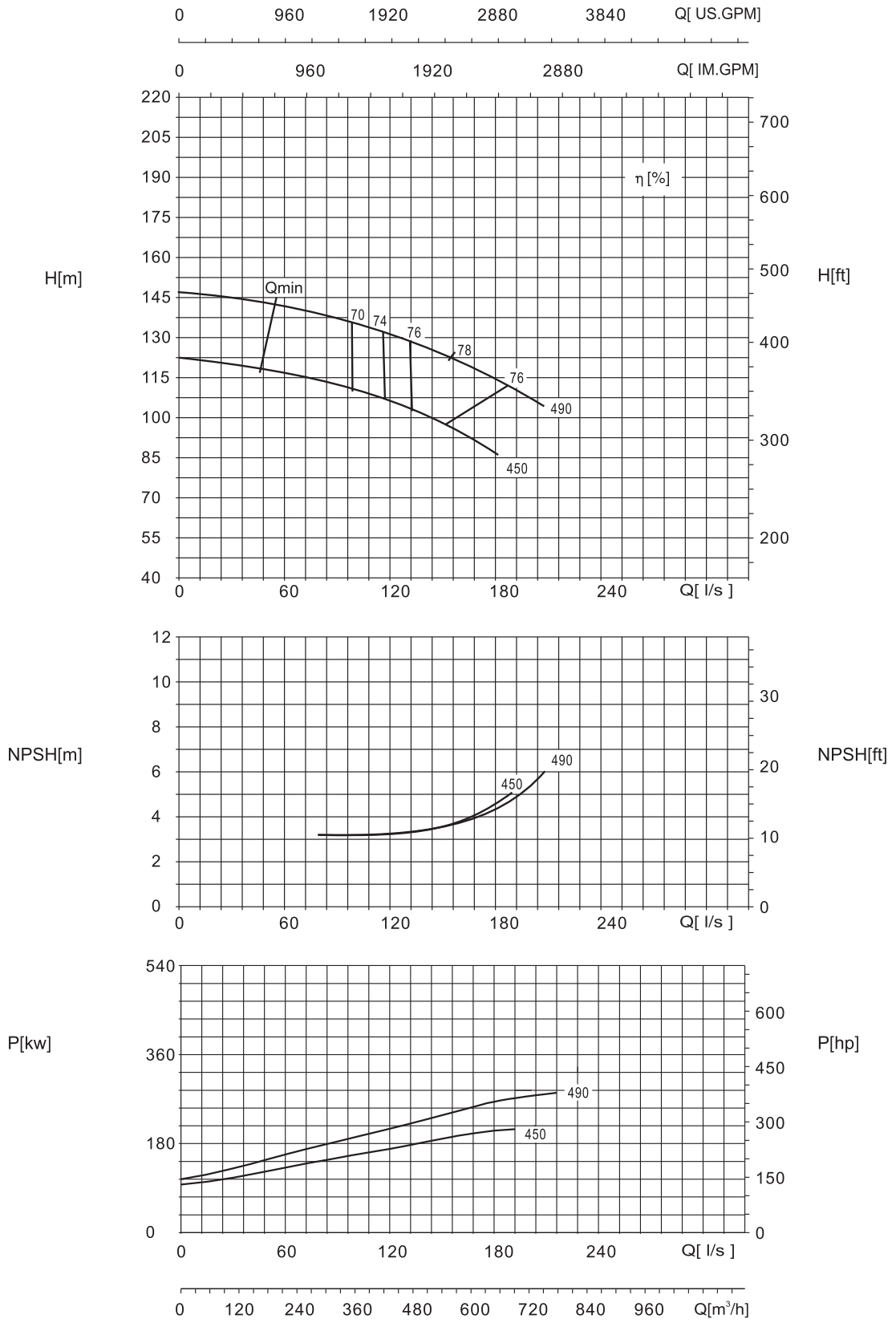

NDS 250-200-340 , n=1750RPM

Head and power ratings apply to media with a density of ρ=1kg-dm³ and a kinetic viscosity of 20mm²/s.

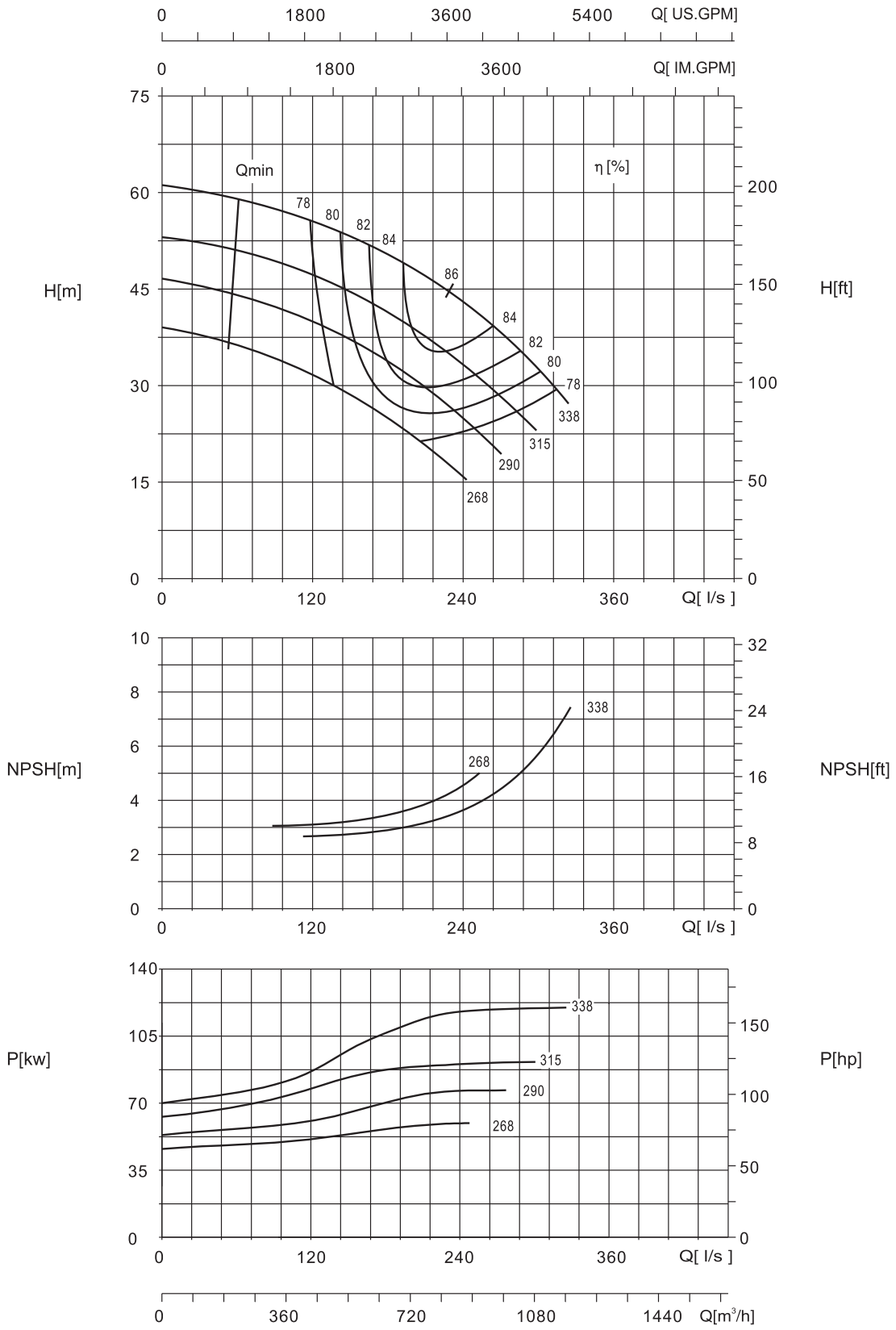

NDS 250-200-430 , n=1750RPM

Head and power ratings apply to media with a density of ρ=1kg-dm³ and a kinetic viscosity of 20mm²/s.

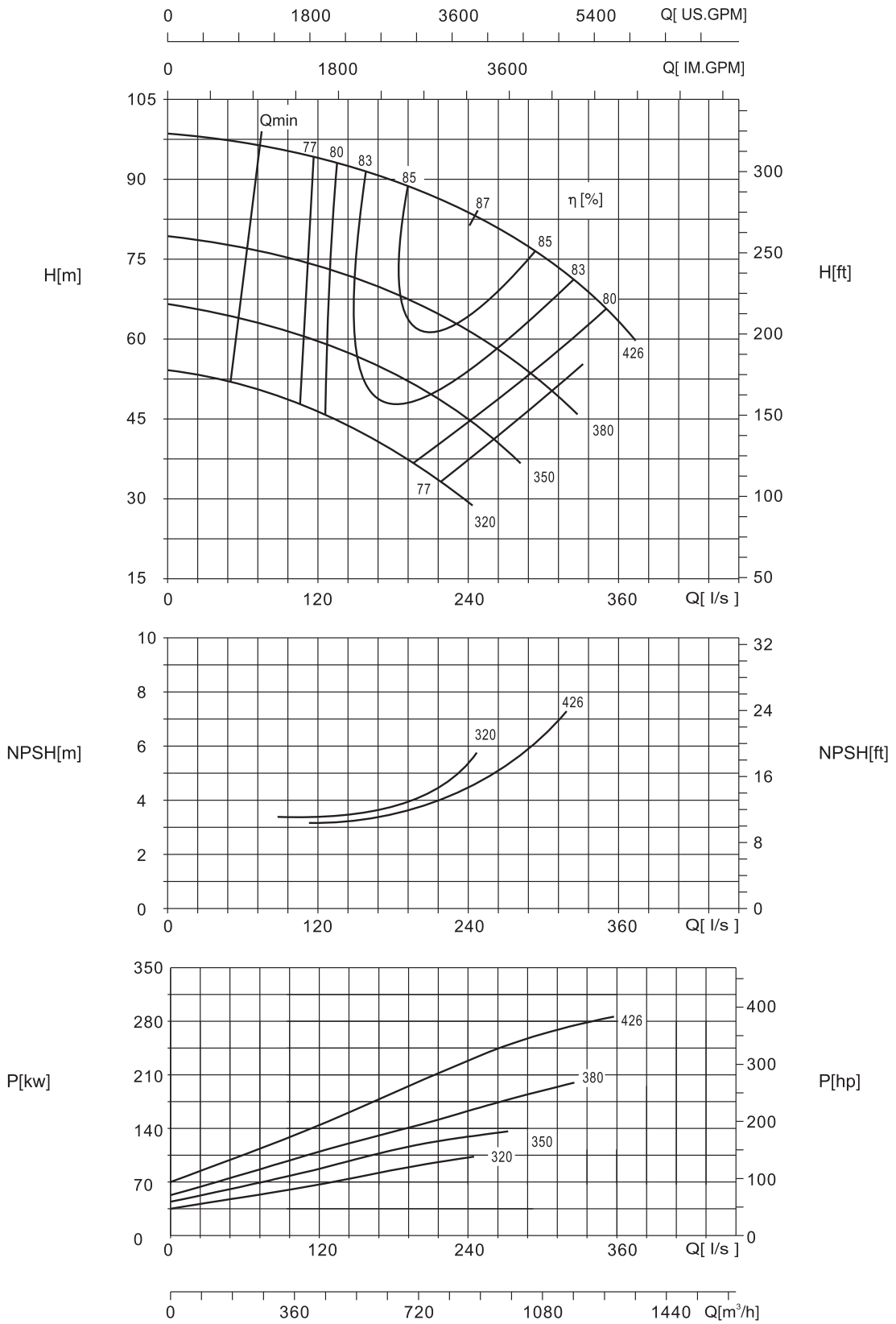

NDS 250-200-530 , n=1750RPM

Head and power ratings apply to media with a density of ρ=1kg-dm³ and a kinetic viscosity of 20mm²/s.

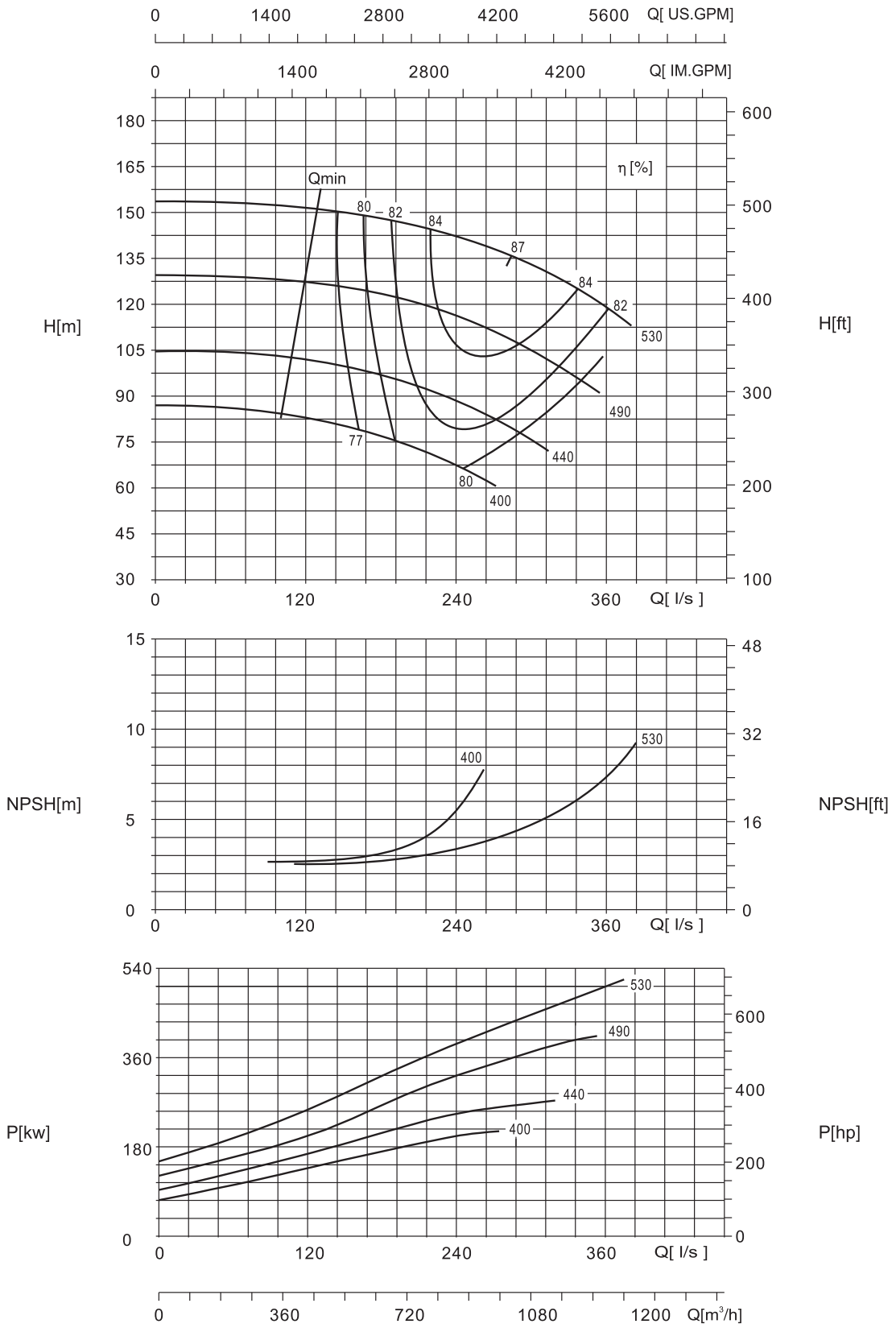

NDS 300-250-270 , n=1750RPM

Head and power ratings apply to media with a density of ρ=1kg-dm³ and a kinetic viscosity of 20mm²/s.

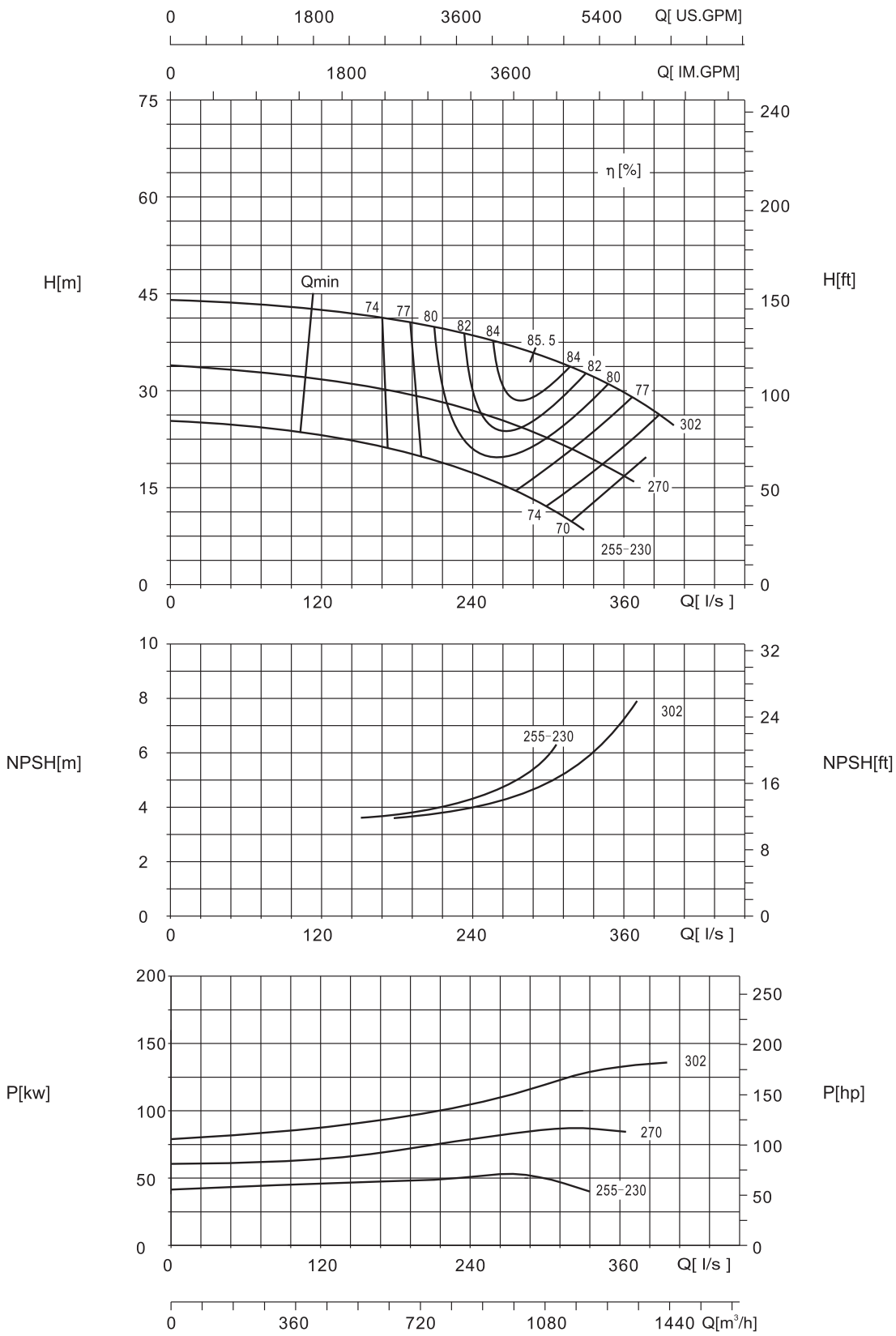

NDS 300-250-280 , n=1750RPM

Head and power ratings apply to media with a density of ρ=1kg-dm³ and a kinetic viscosity of 20mm²/s.

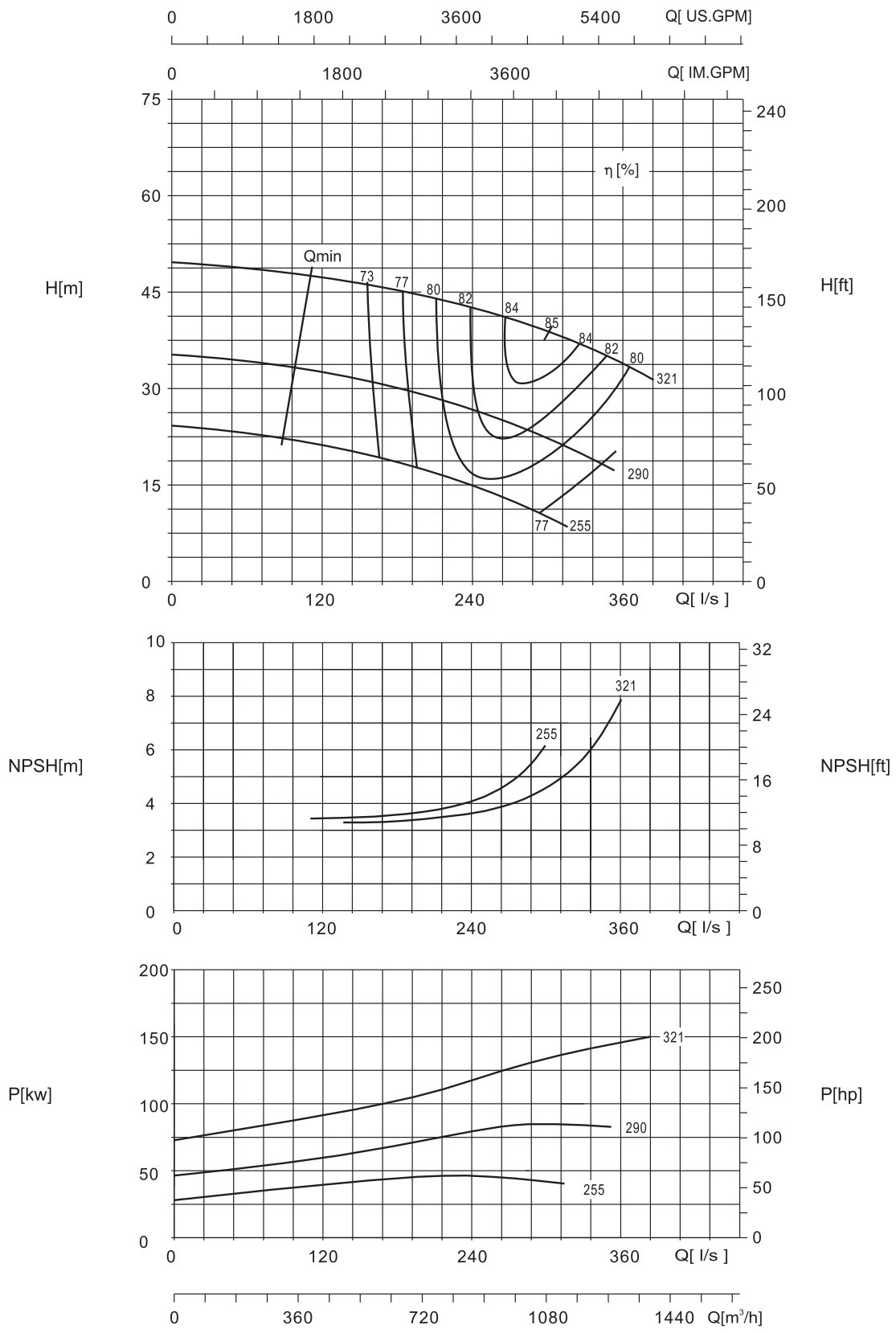

NDS 300-250-390 , n=1750RPM

Head and power ratings apply to media with a density of ρ=1kg-dm³ and a kinetic viscosity of 20mm²/s.

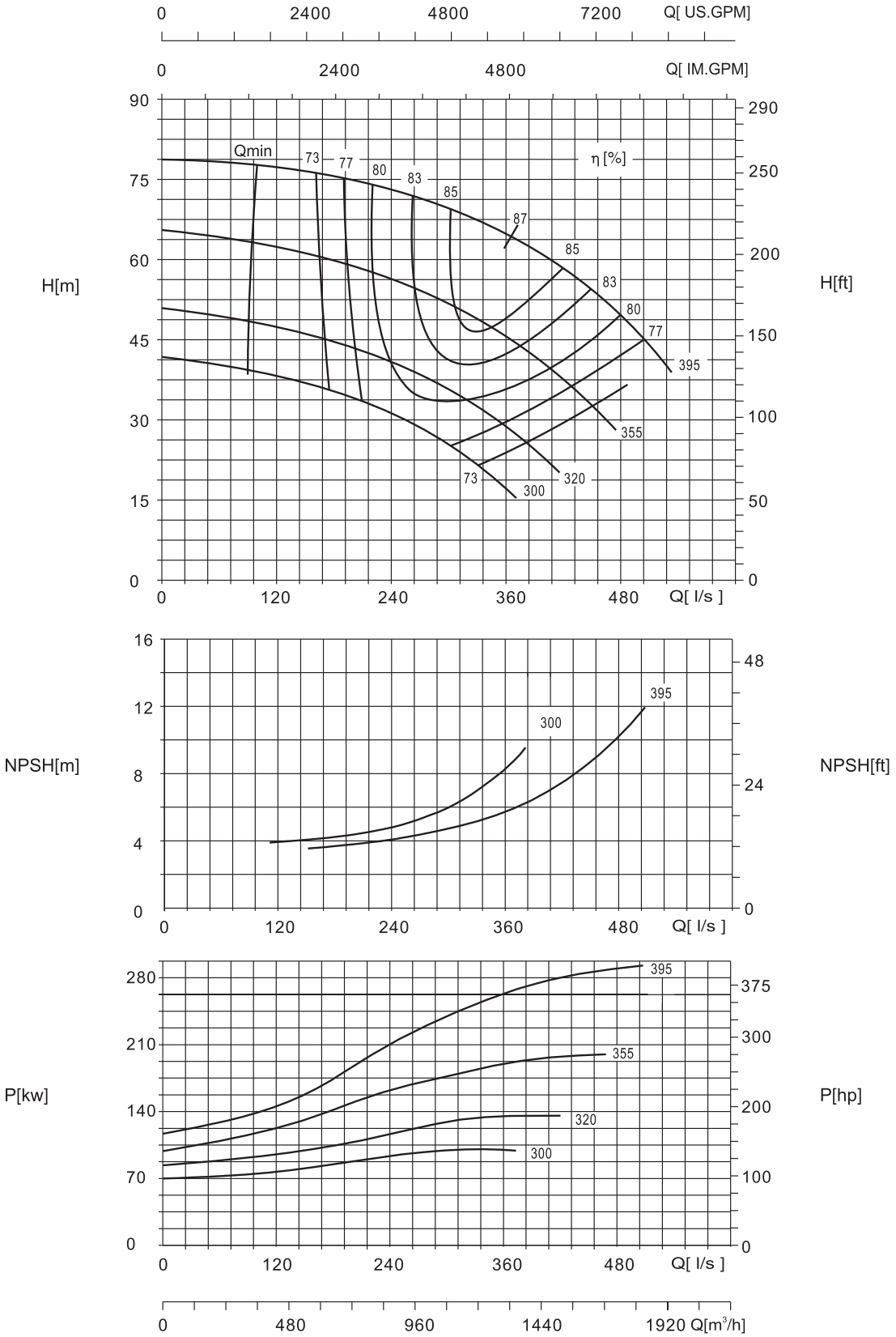

NDS 300-250-490 , n=1750RPM

Head and power ratings apply to media with a density of ρ=1kg-dm³ and a kinetic viscosity of 20mm²/s.

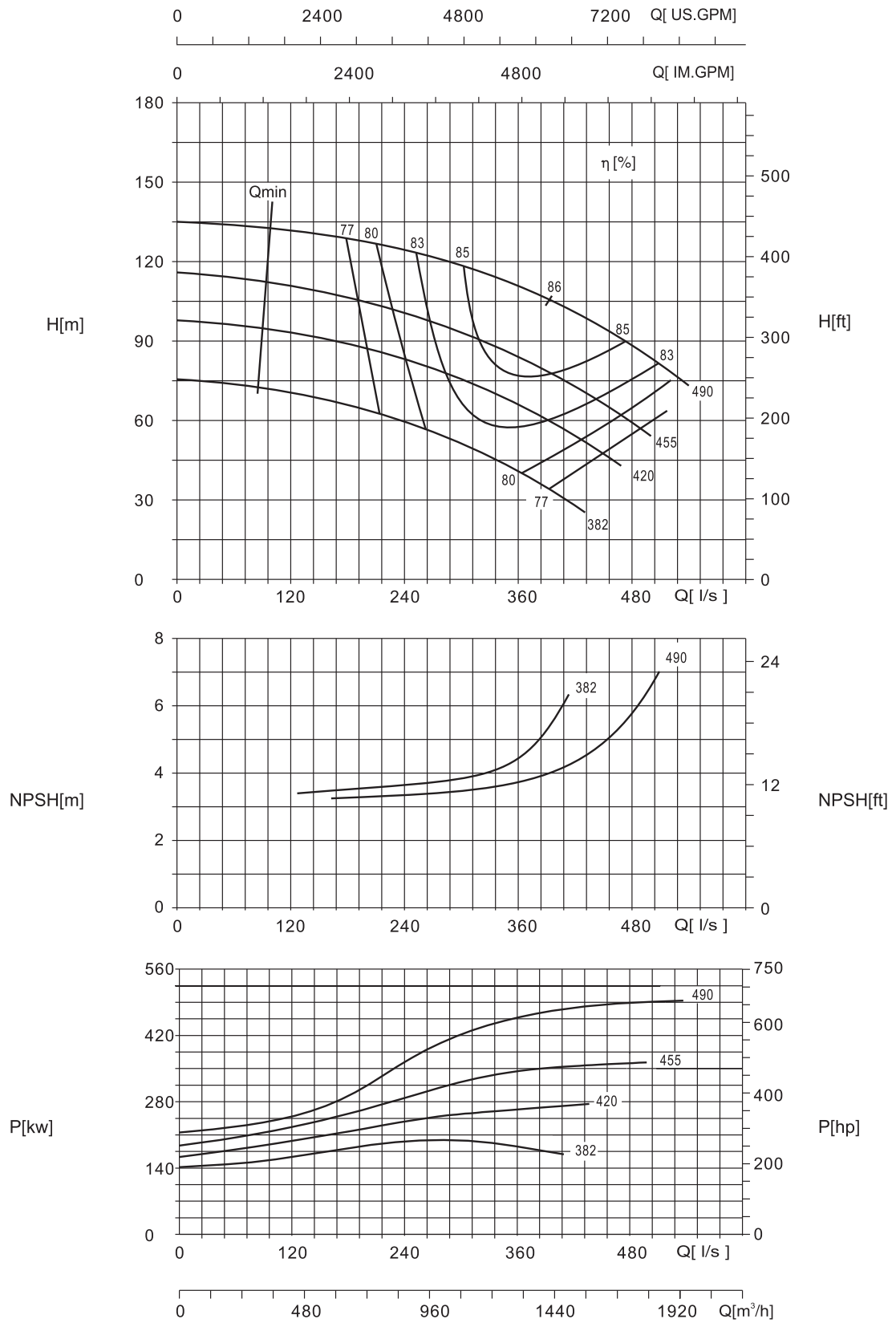

NDS 300-250-610 , n=1750RPM

Head and power ratings apply to media with a density of ρ=1kg-dm³ and a kinetic viscosity of 20mm²/s.

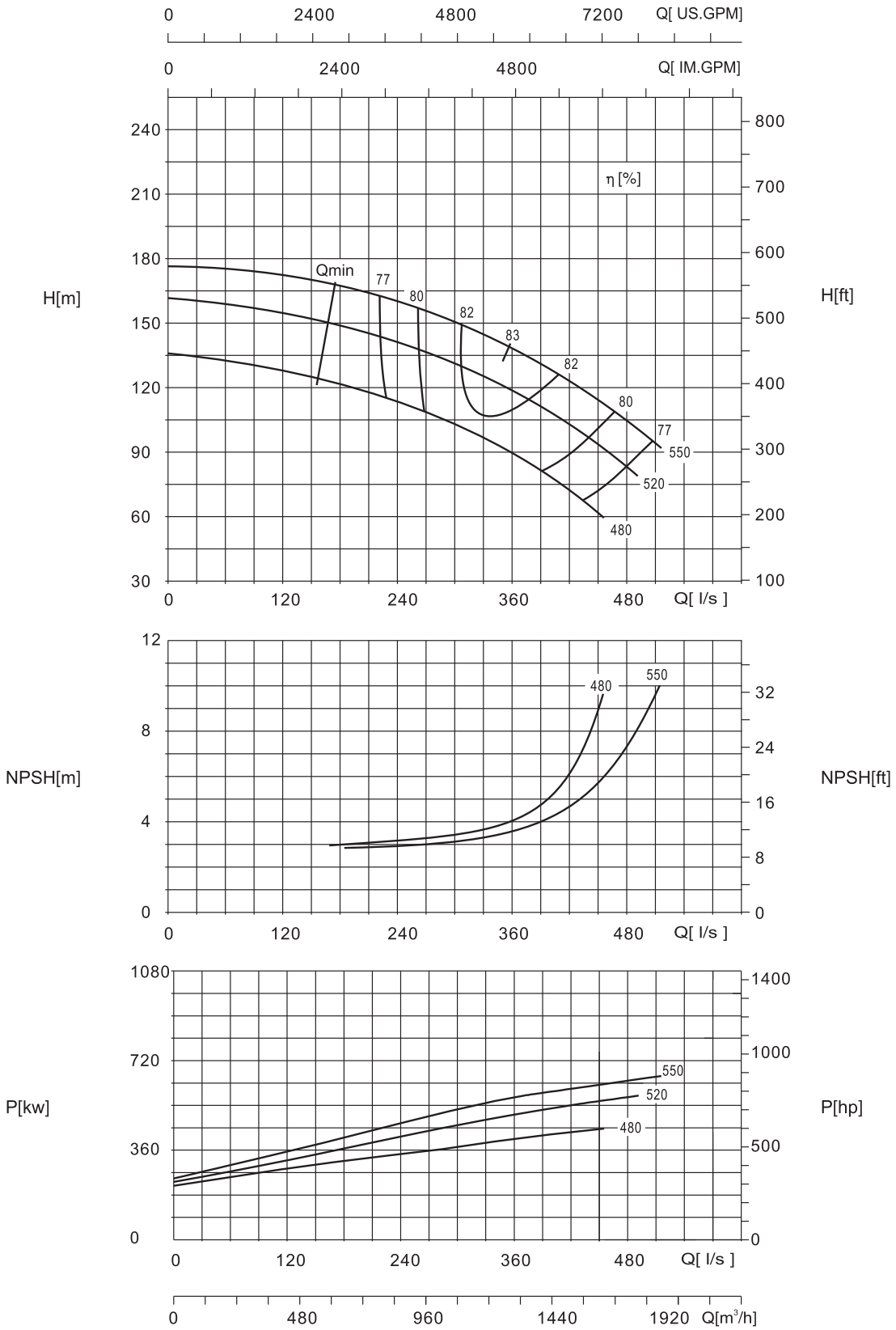

NDS 350-300-310 , n=1750RPM

Head and power ratings apply to media with a density of ρ=1kg-dm³ and a kinetic viscosity of 20mm²/s.

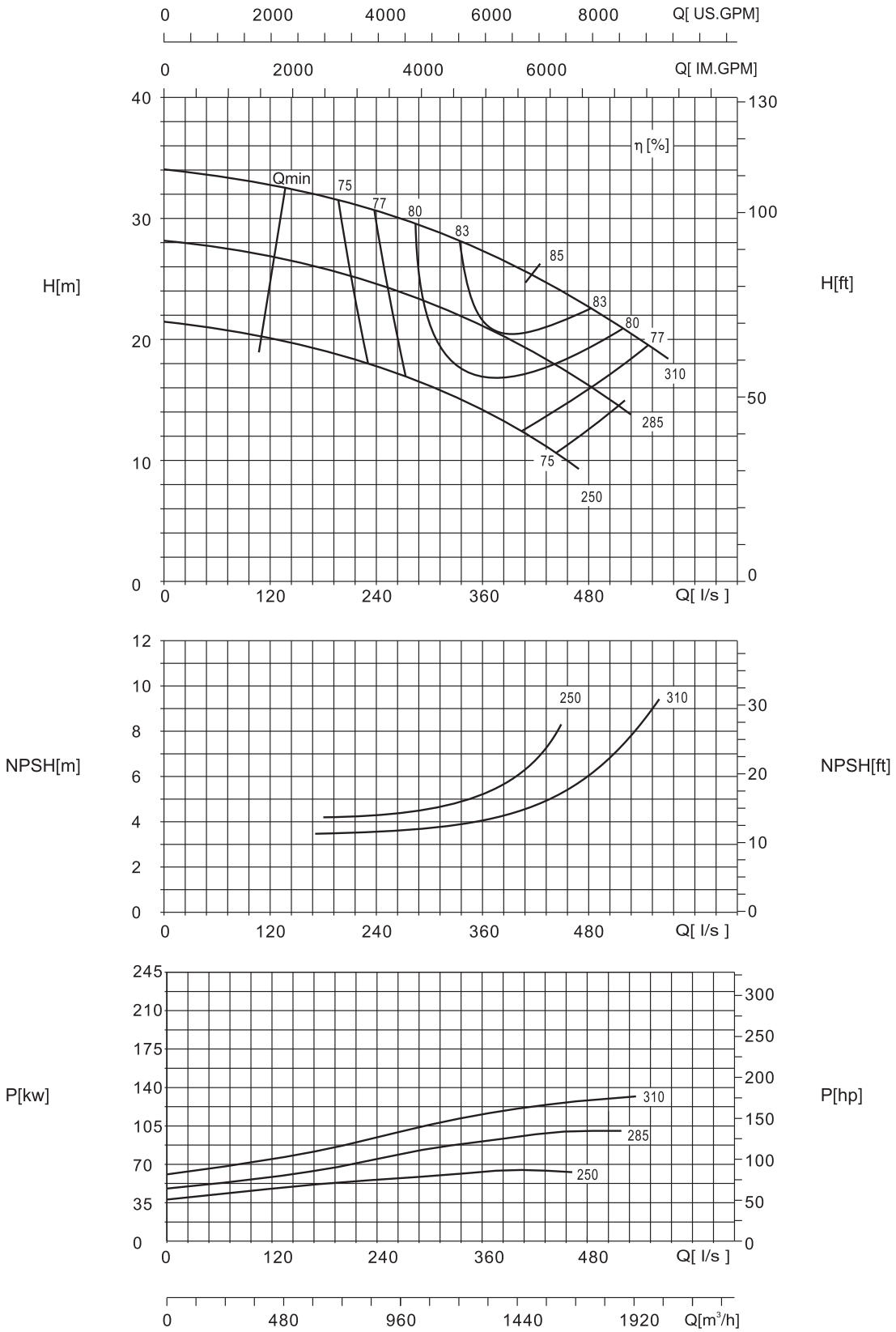

NDS 350-300-330 , n=1750RPM

Head and power ratings apply to media with a density of ρ=1kg-dm³ and a kinetic viscosity of 20mm²/s.

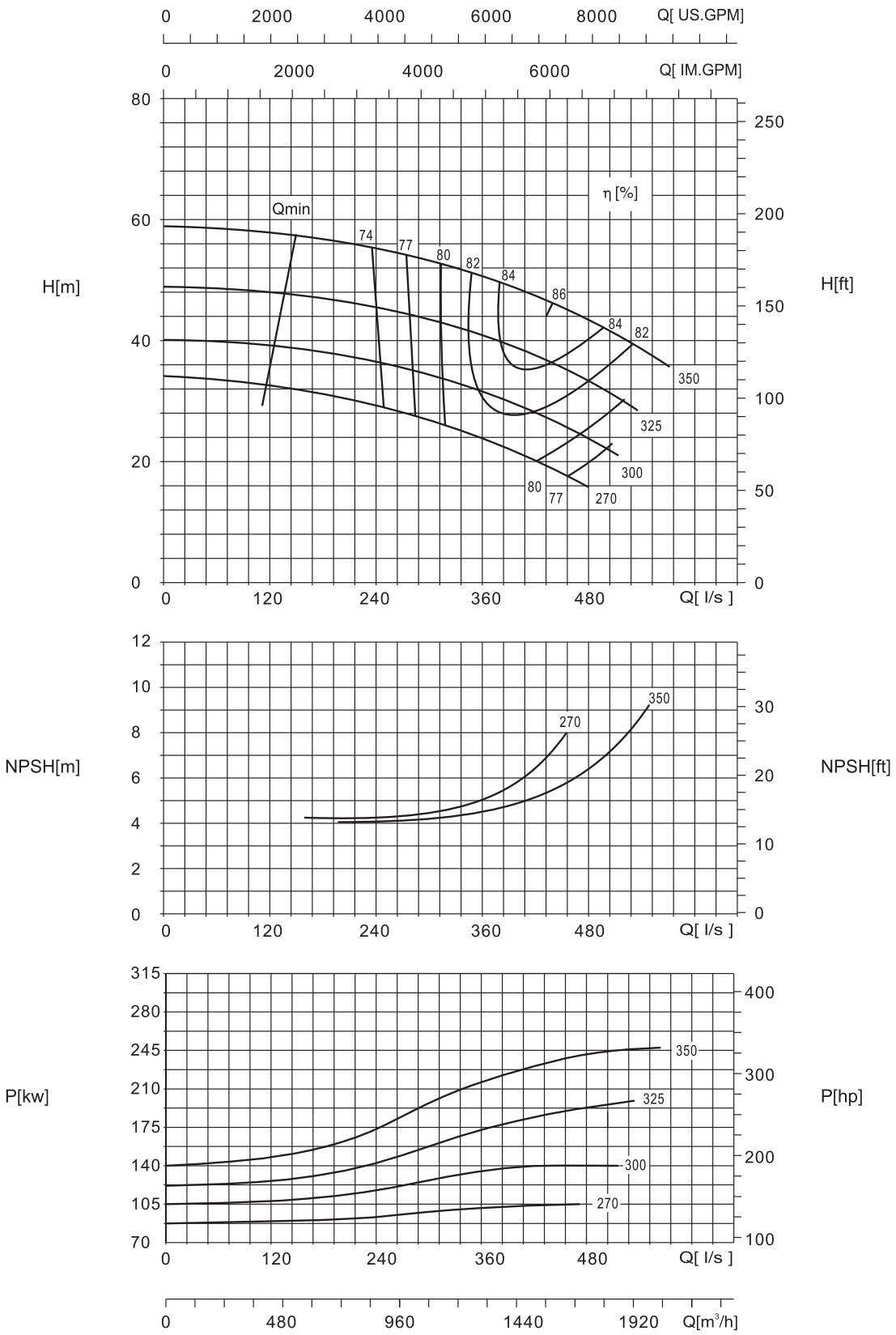

NDS 400-300-450H , n=1750RPM

Head and power ratings apply to media with a density of ρ=1kg-dm³ and a kinetic viscosity of 20mm²/s.

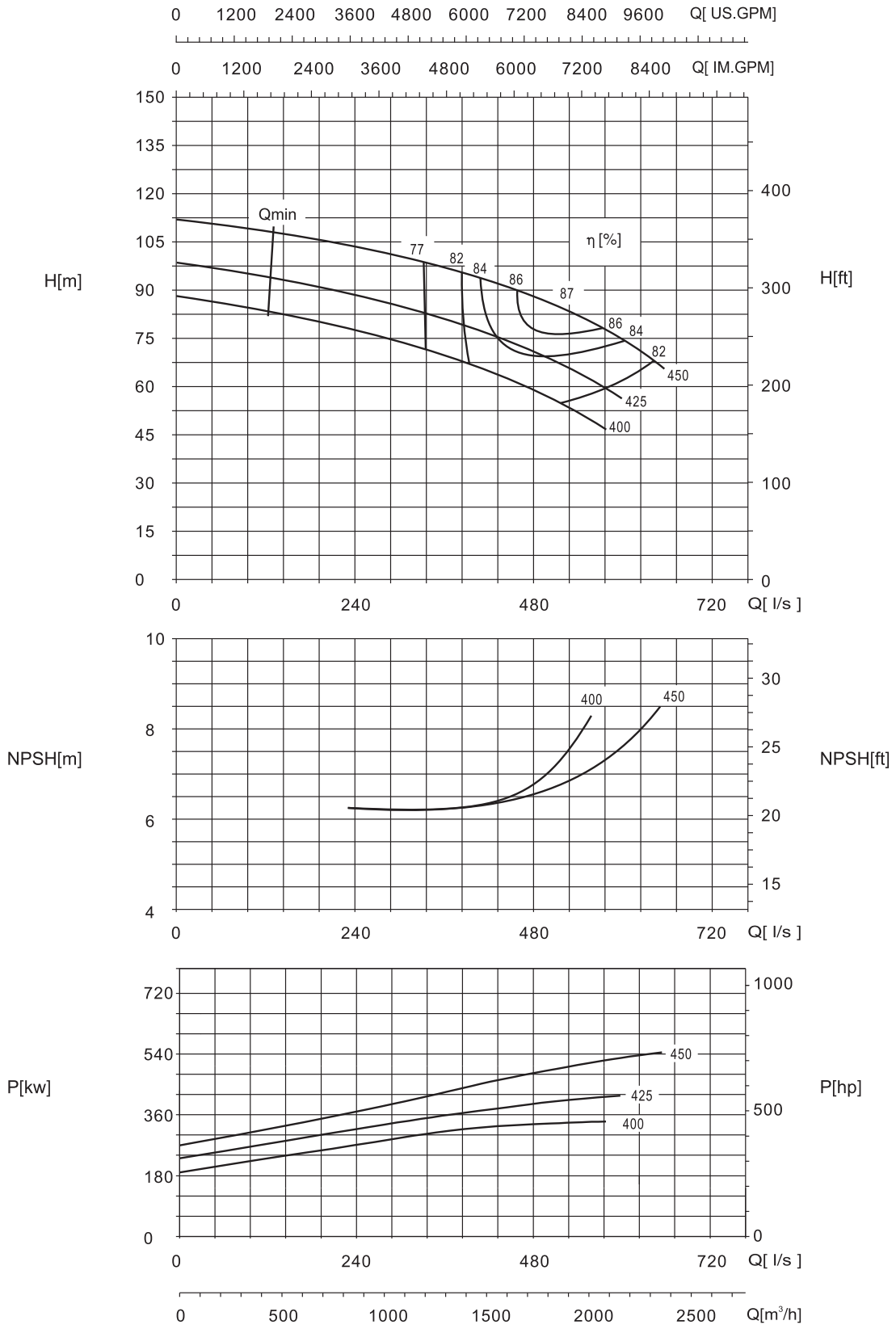

NDS 400-300-450L , n=1750RPM

Head and power ratings apply to media with a density of ρ=1kg-dm³ and a kinetic viscosity of 20mm²/s.

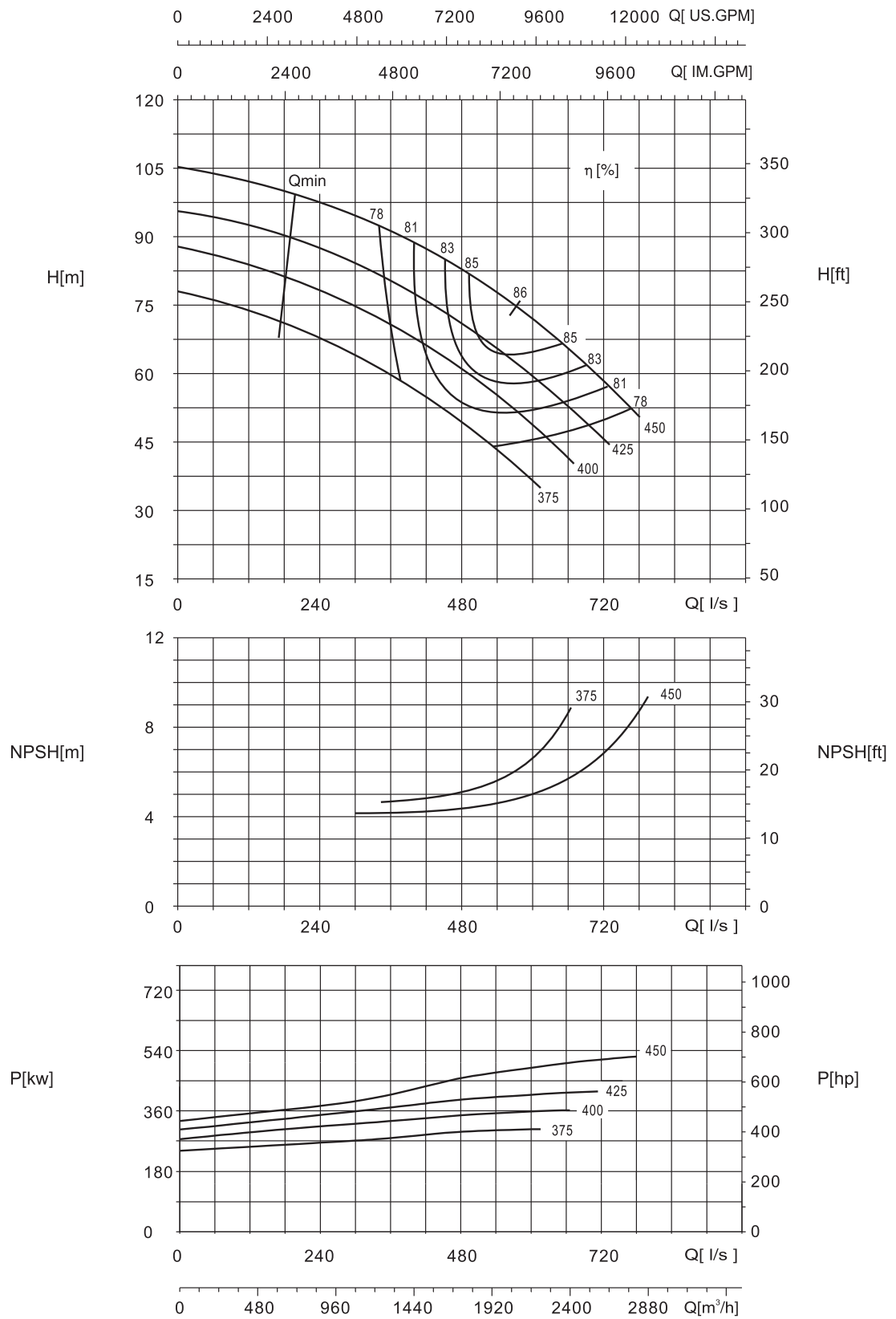

NDS 400-300-570 , n=1750RPM

Head and power ratings apply to media with a density of ρ=1kg-dm³ and a kinetic viscosity of 20mm²/s.

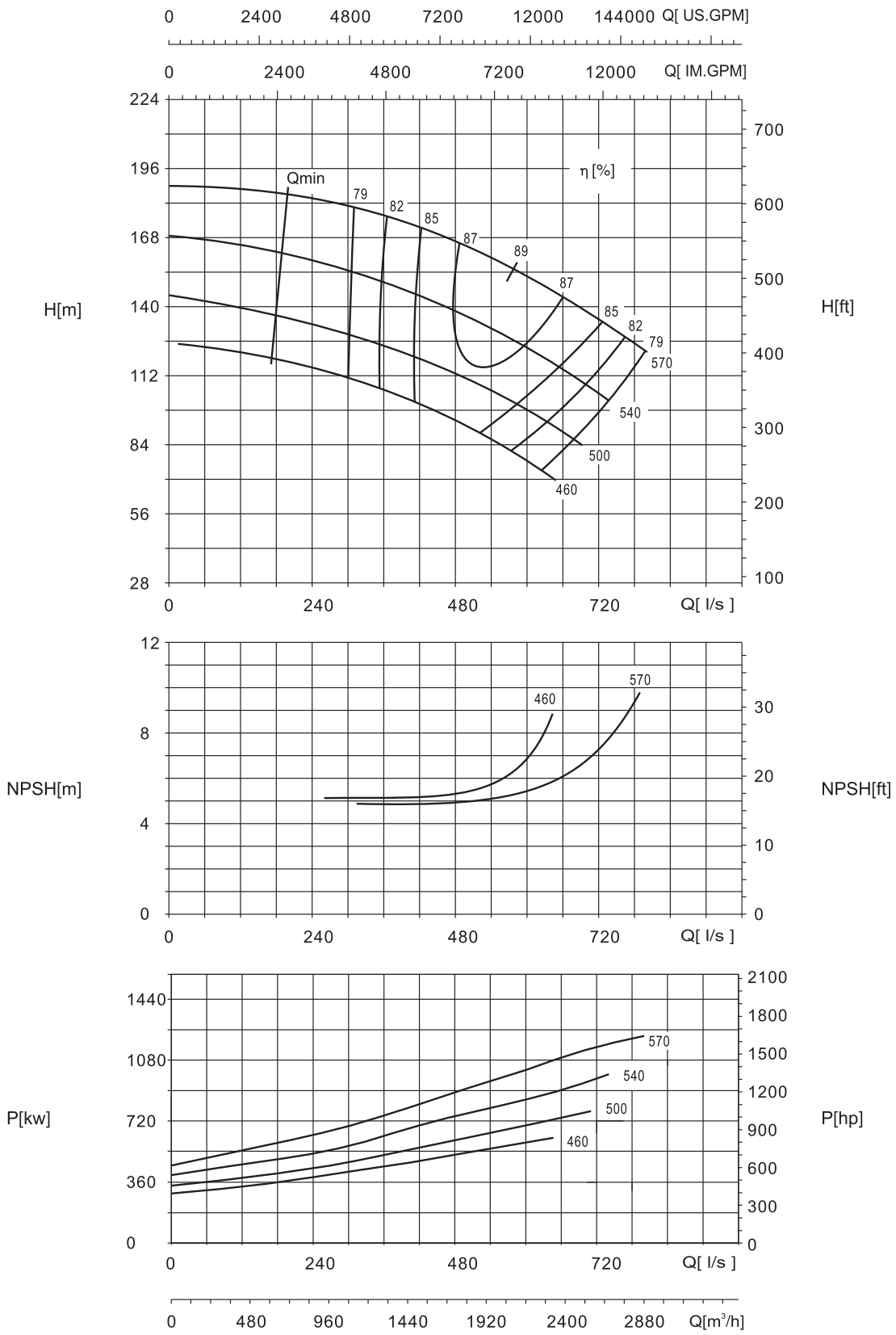

NDS 400-300-700 , n=1750RPM

Head and power ratings apply to media with a density of ρ=1kg-dm³ and a kinetic viscosity of 20mm²/s.

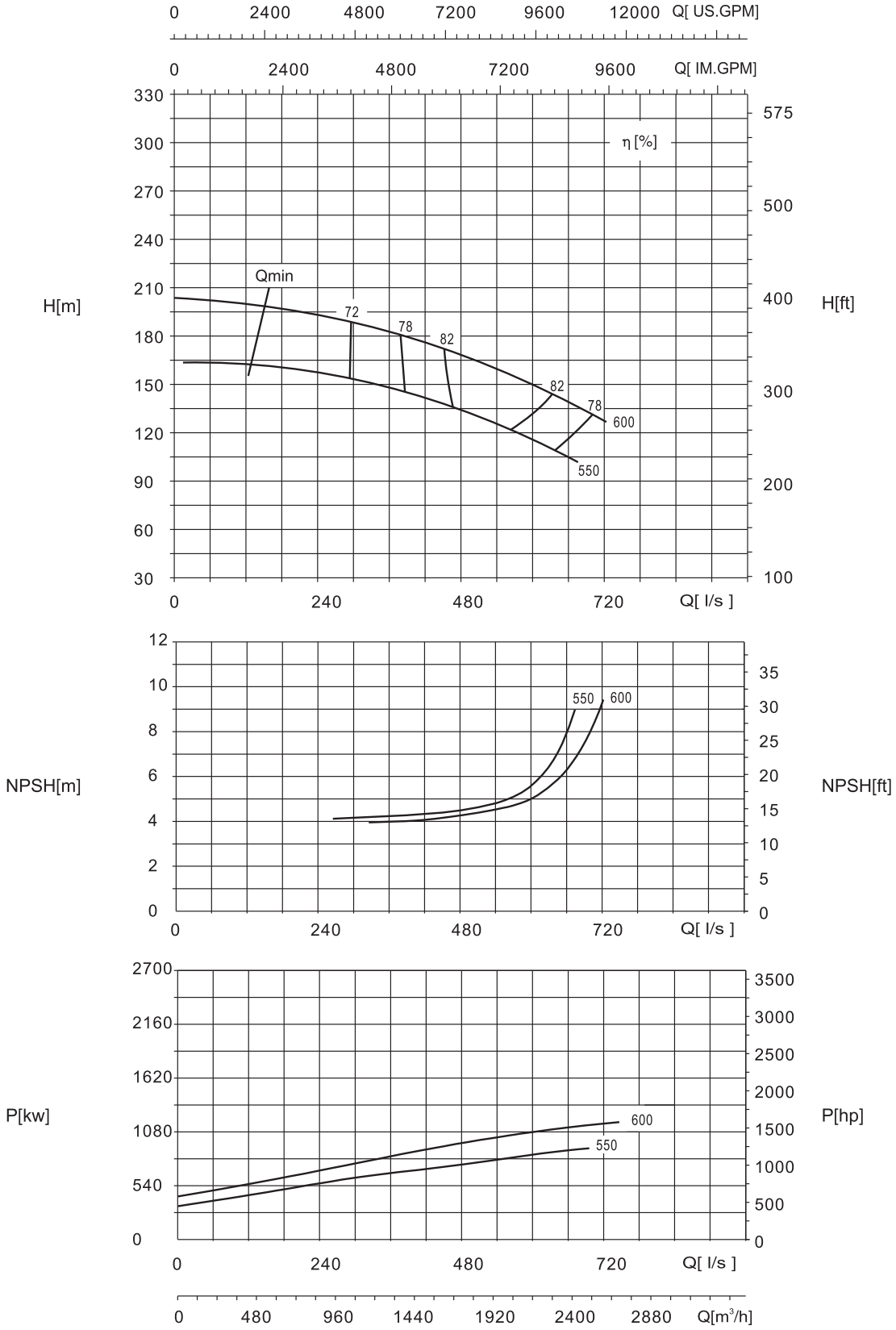

NDS 400-350-360 , n=1750RPM

Head and power ratings apply to media with a density of ρ=1kg-dm³ and a kinetic viscosity of 20mm²/s.

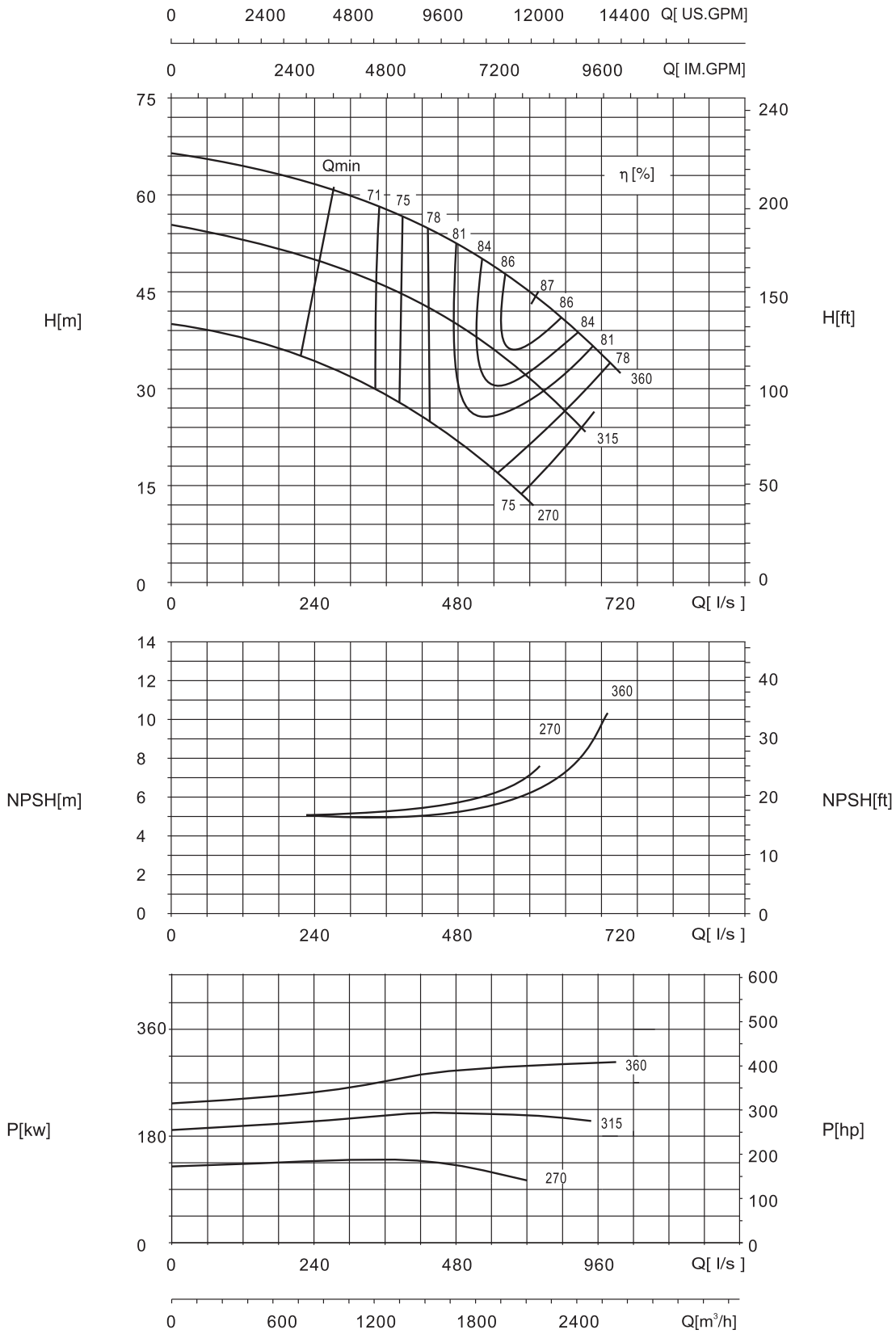

NDS 400-350-380 , n=1750RPM

Head and power ratings apply to media with a density of ρ=1kg-dm³ and a kinetic viscosity of 20mm²/s.

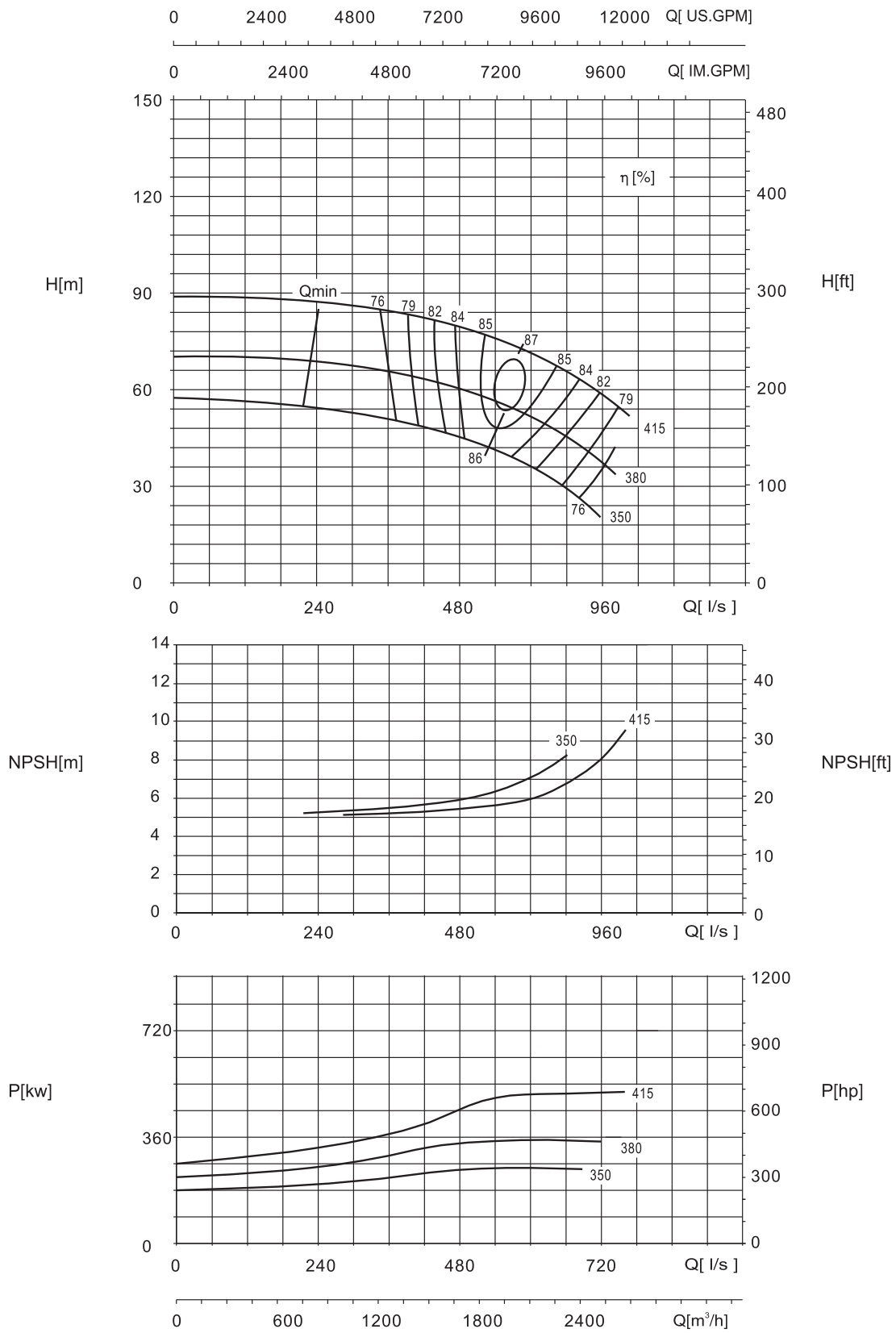

NDS 400-350-520 , n=1750RPM

Head and power ratings apply to media with a density of ρ=1kg-dm³ and a kinetic viscosity of 20mm²/s.

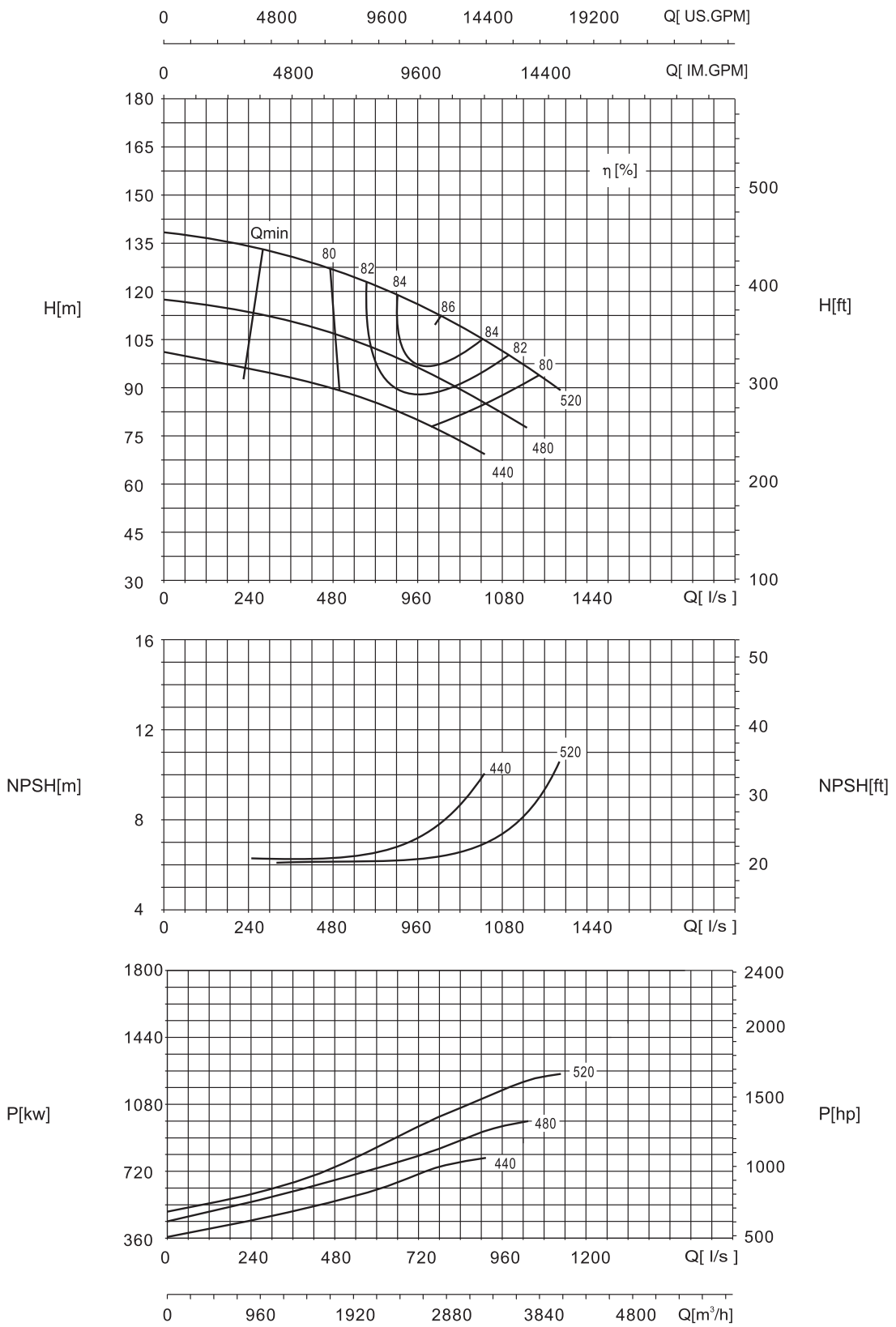

NDS 450-450-350 , n=1750RPM

Head and power ratings apply to media with a density of ρ=1kg-dm³ and a kinetic viscosity of 20mm²/s.

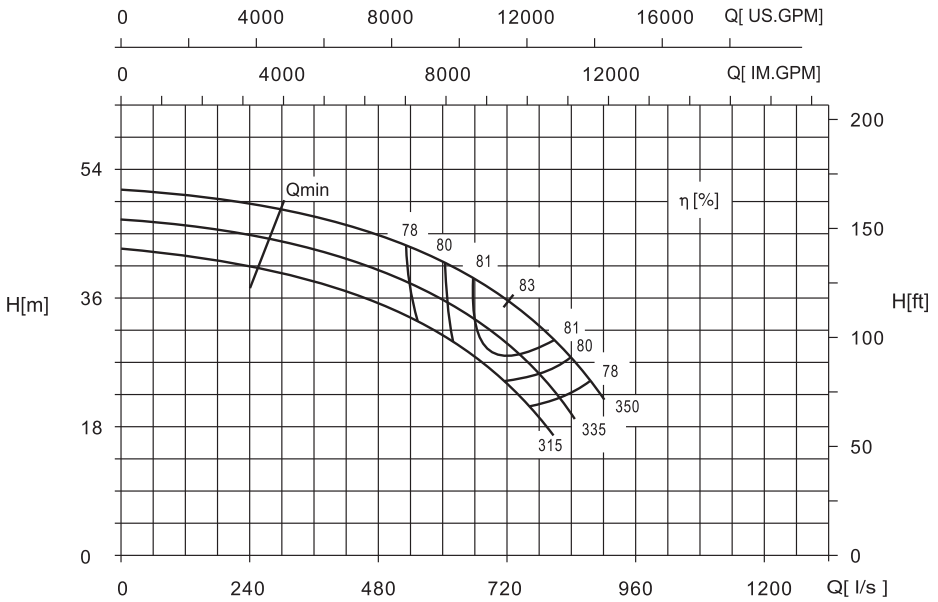

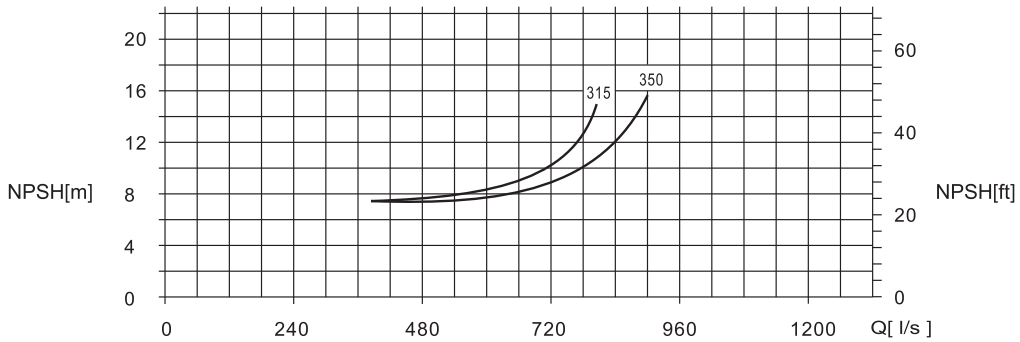

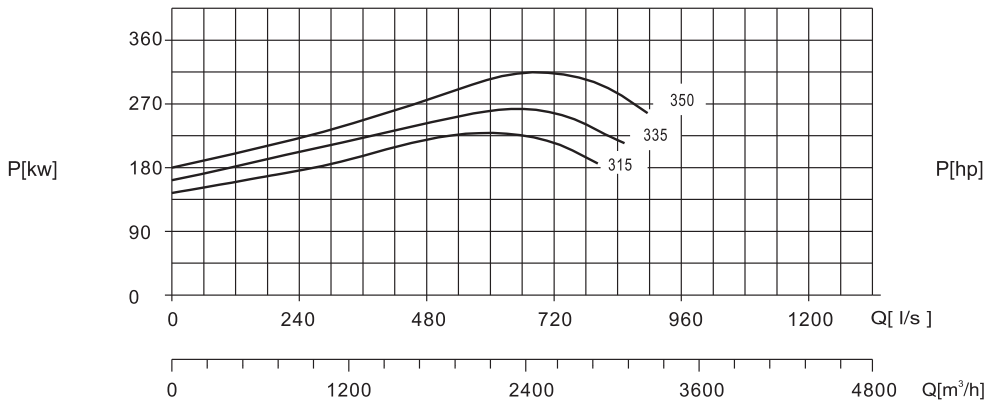

NDS 500-400-420 , n=1750RPM

Head and power ratings apply to media with a density of ρ=1kg-dm³ and a kinetic viscosity of 20mm²/s.

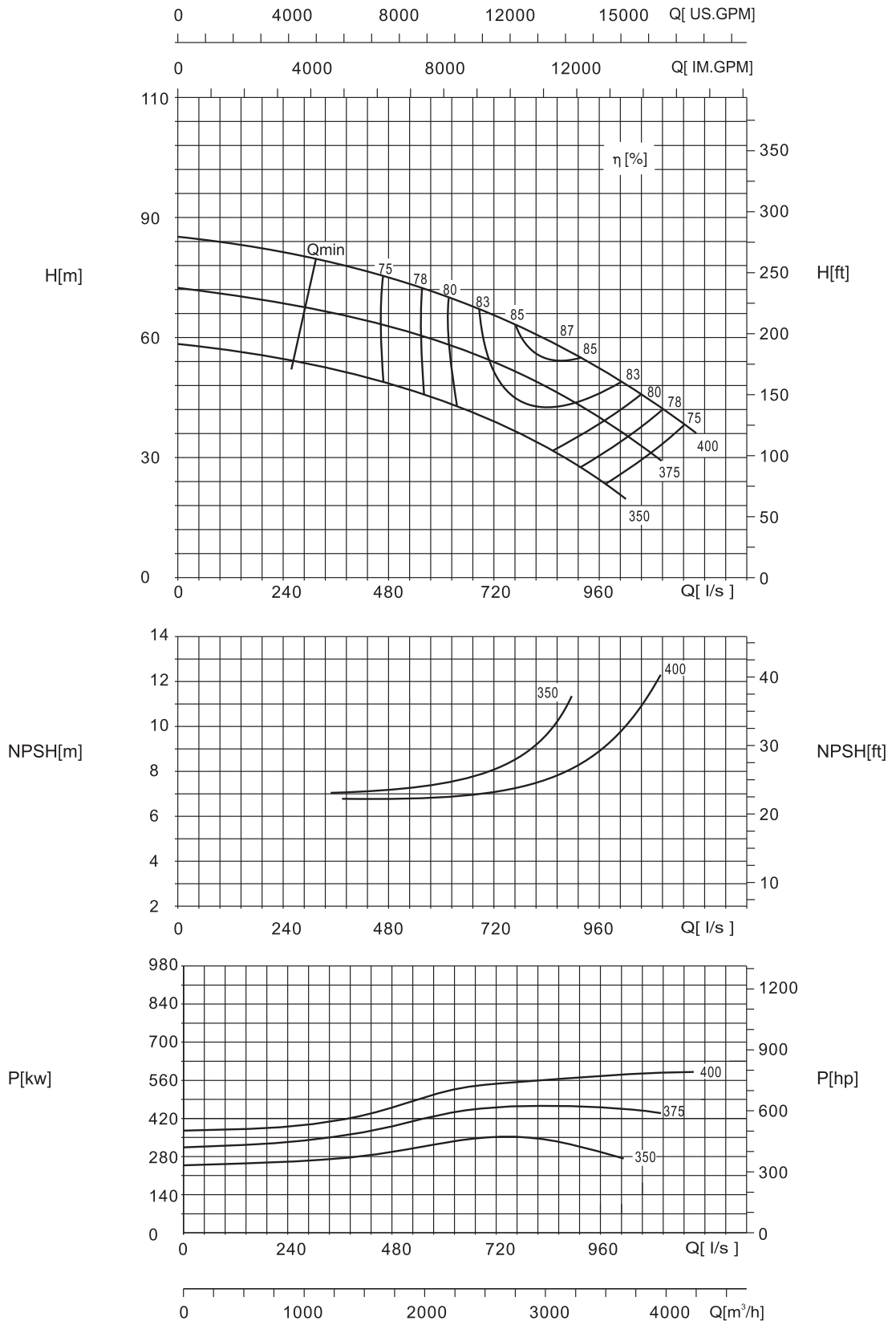

NDS 500-400-540 , n=1750RPM

Head and power ratings apply to media with a density of ρ=1kg-dm³ and a kinetic viscosity of 20mm²/s.

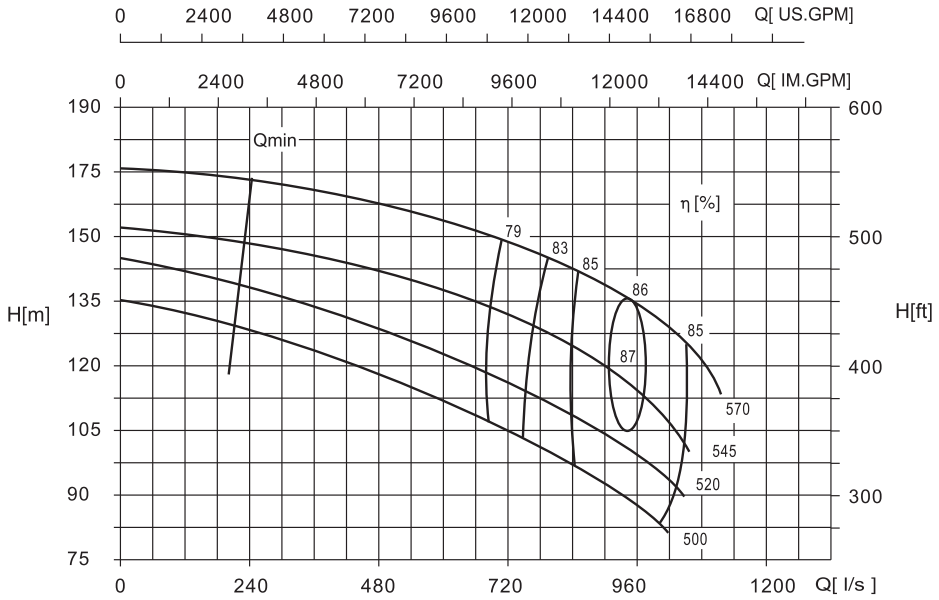

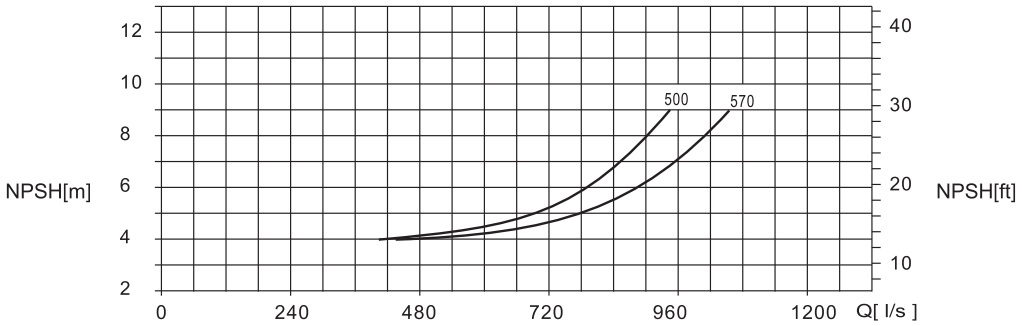

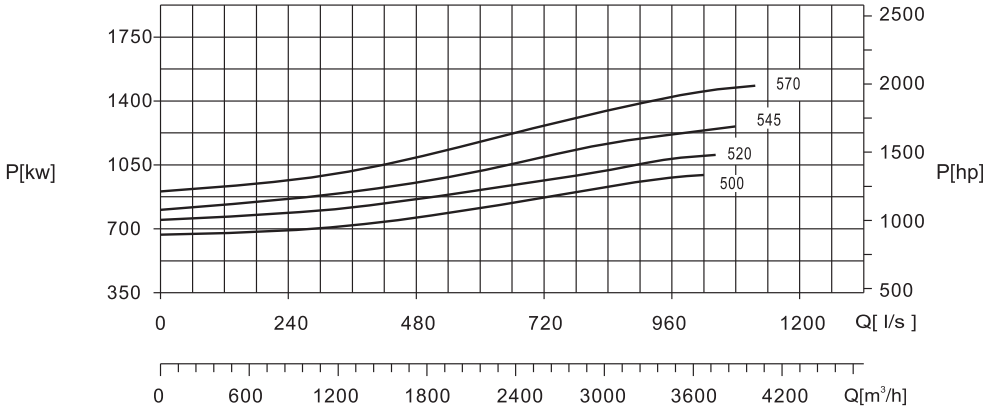

NDS 400-350-520 , n=1180RPM

Head and power ratings apply to media with a density of ρ=1kg-dm³ and a kinetic viscosity of 20mm²/s.

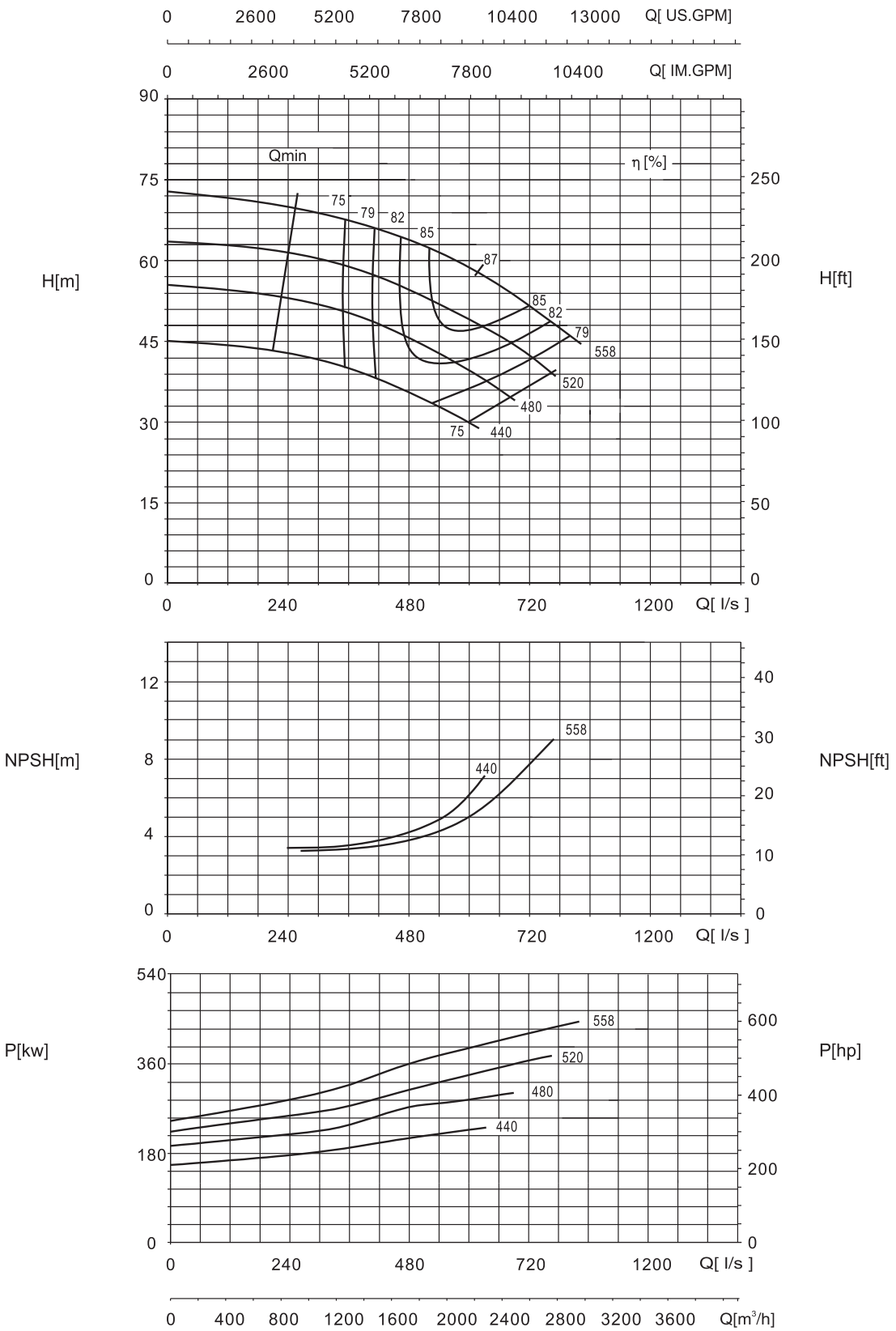

NDS 500-400-400 , n=1180RPM

Head and power ratings apply to media with a density of ρ=1kg-dm³ and a kinetic viscosity of 20mm²/s.

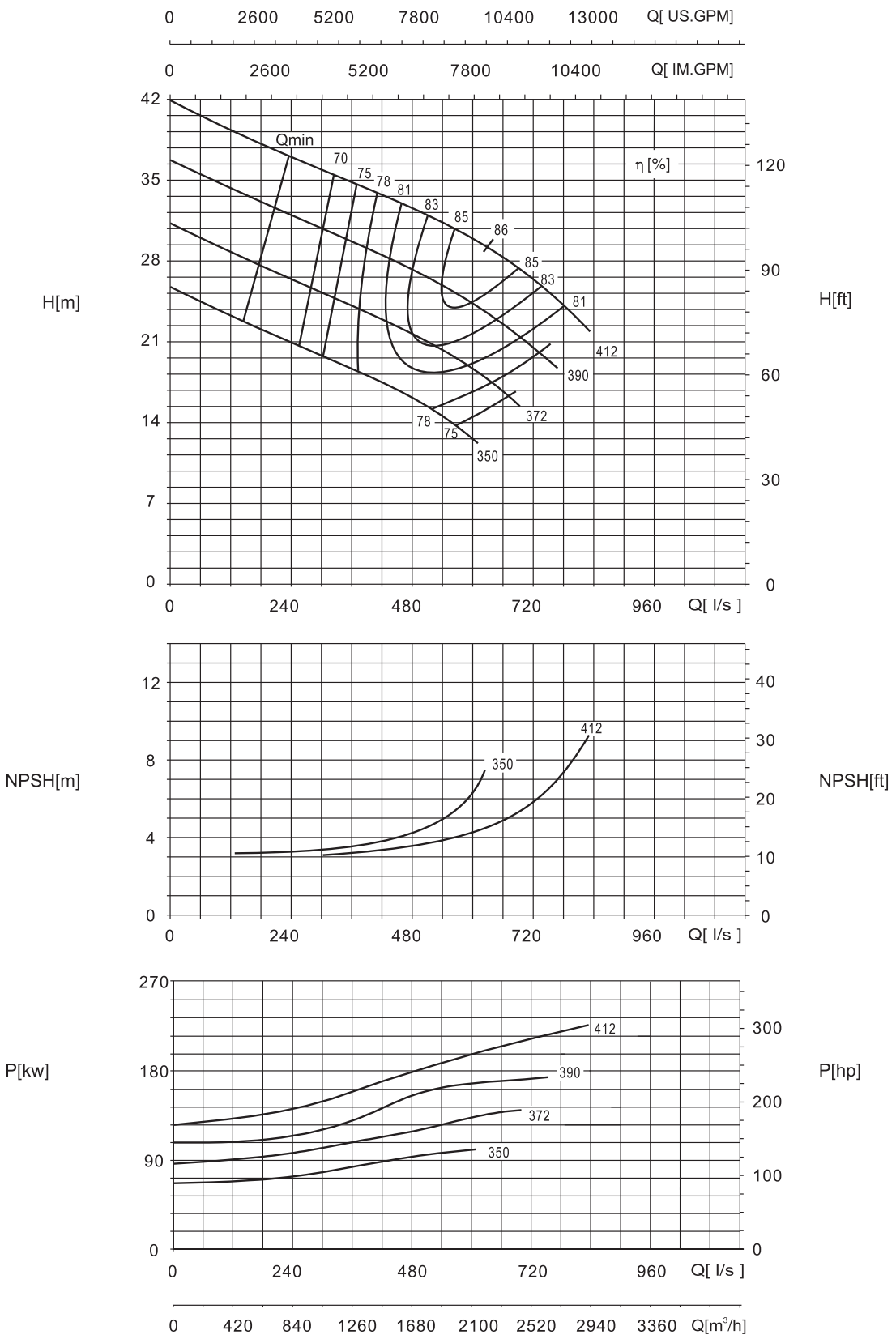

NDS 500-400-420 , n=1180RPM

Head and power ratings apply to media with a density of ρ=1kg-dm³ and a kinetic viscosity of 20mm²/s.

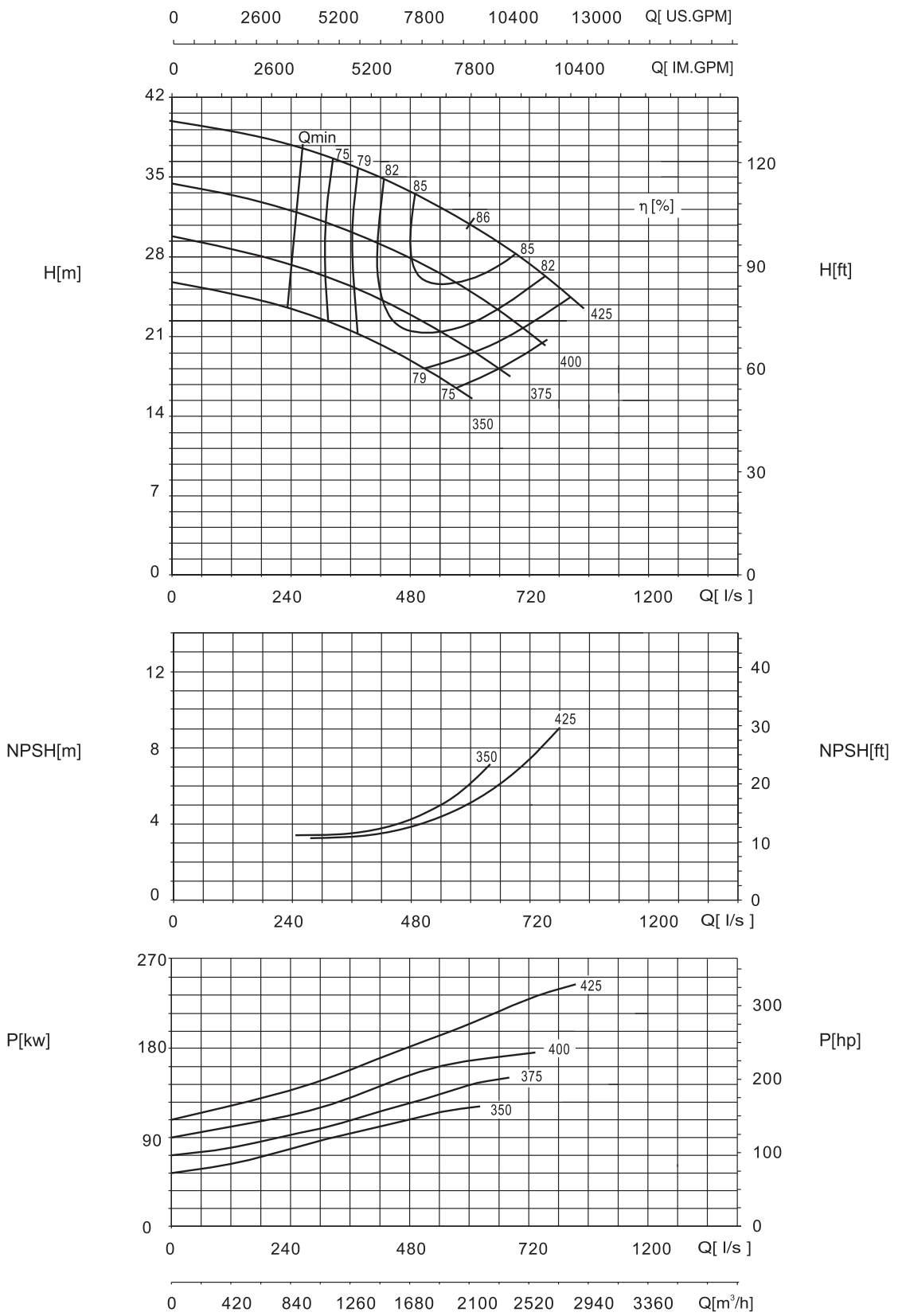

NDS 500-400-570 , n=1180RPM

Head and power ratings apply to media with a density of ρ=1kg-dm³ and a kinetic viscosity of 20mm²/s.

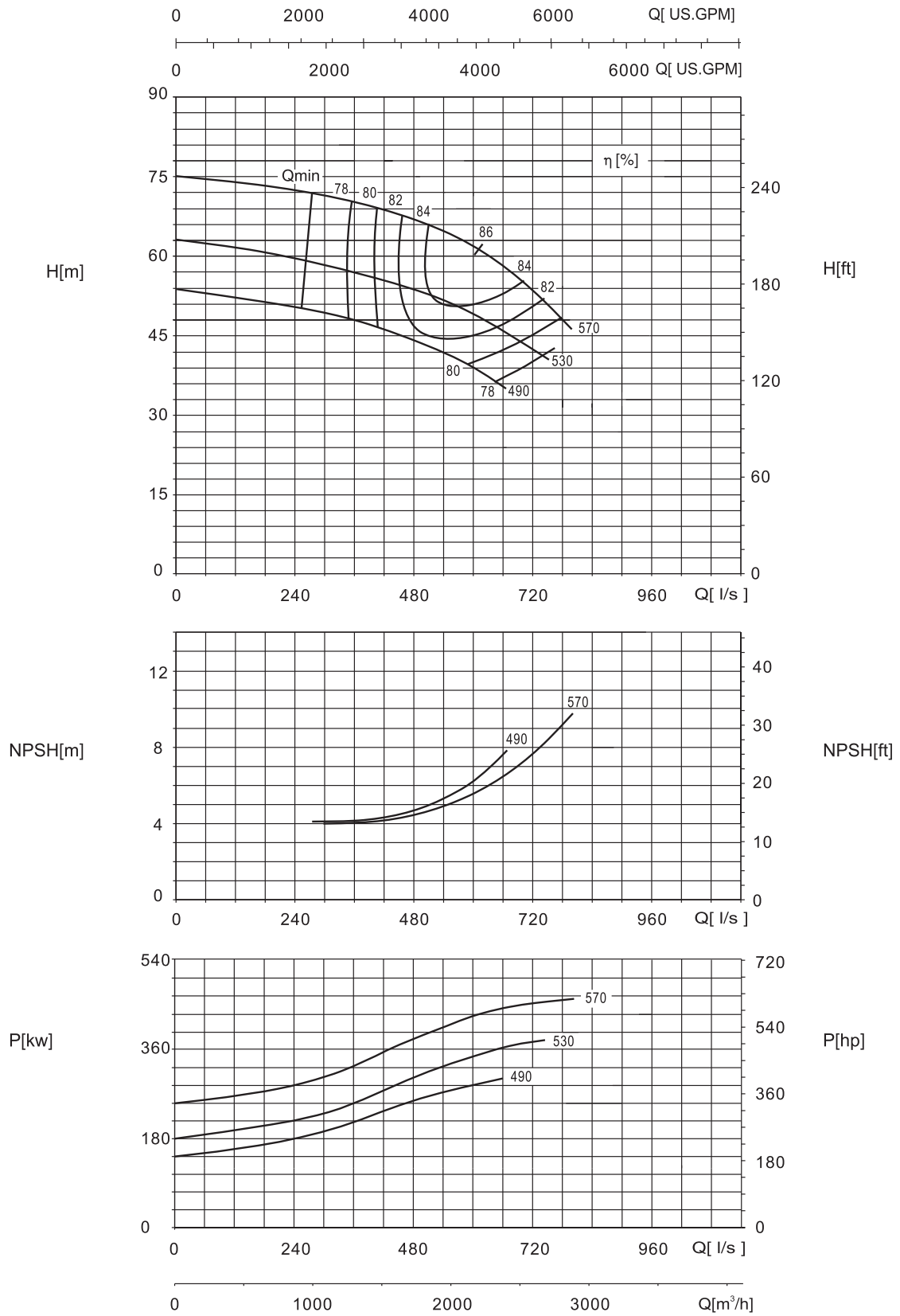

NDS 500-400-675 , n=1180RPM

Head and power ratings apply to media with a density of ρ=1kg-dm³ and a kinetic viscosity of 20mm²/s.

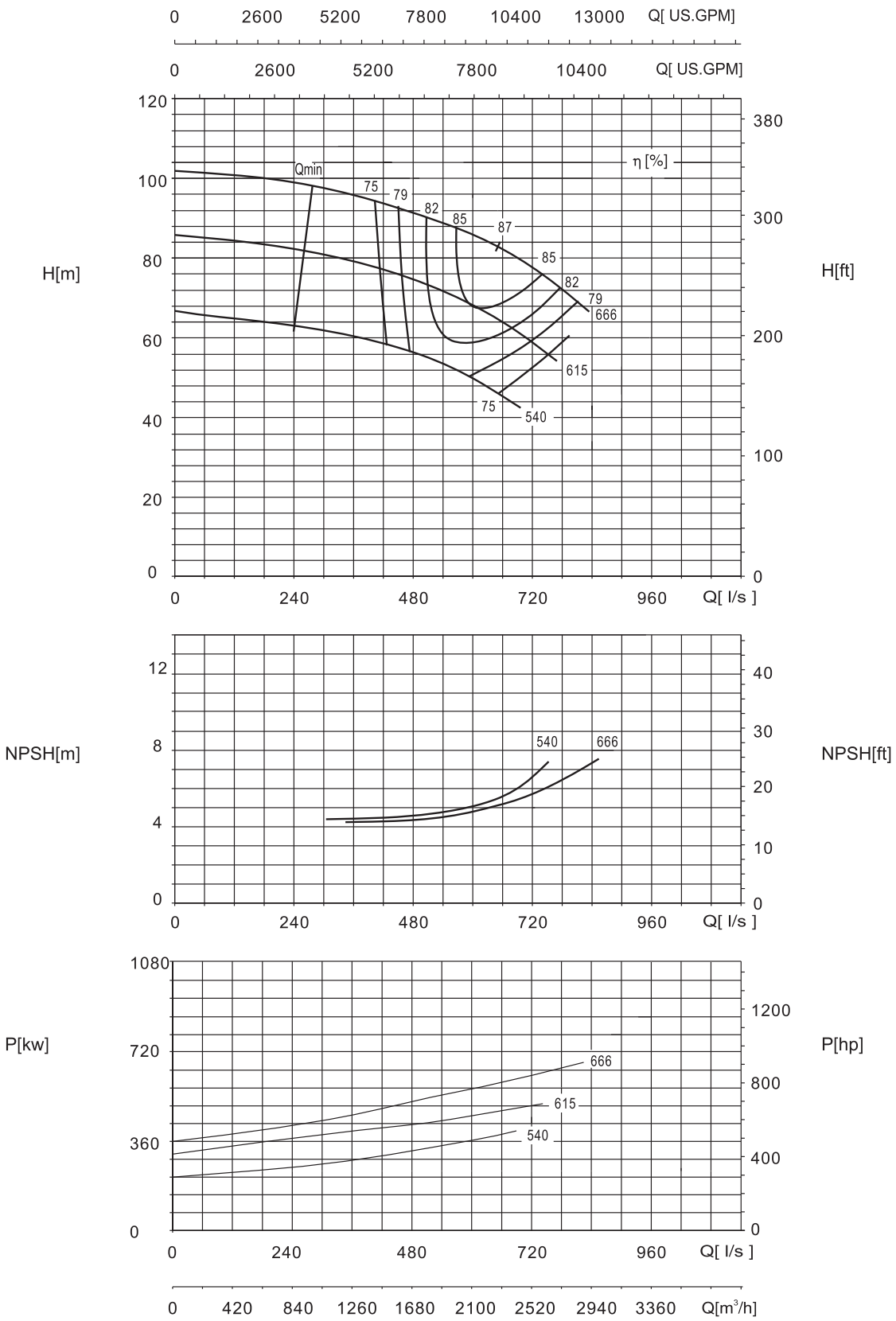

NDS 600-400-740 , n=1180RPM

Head and power ratings apply to media with a density of ρ=1kg-dm³ and a kinetic viscosity of 20mm²/s.

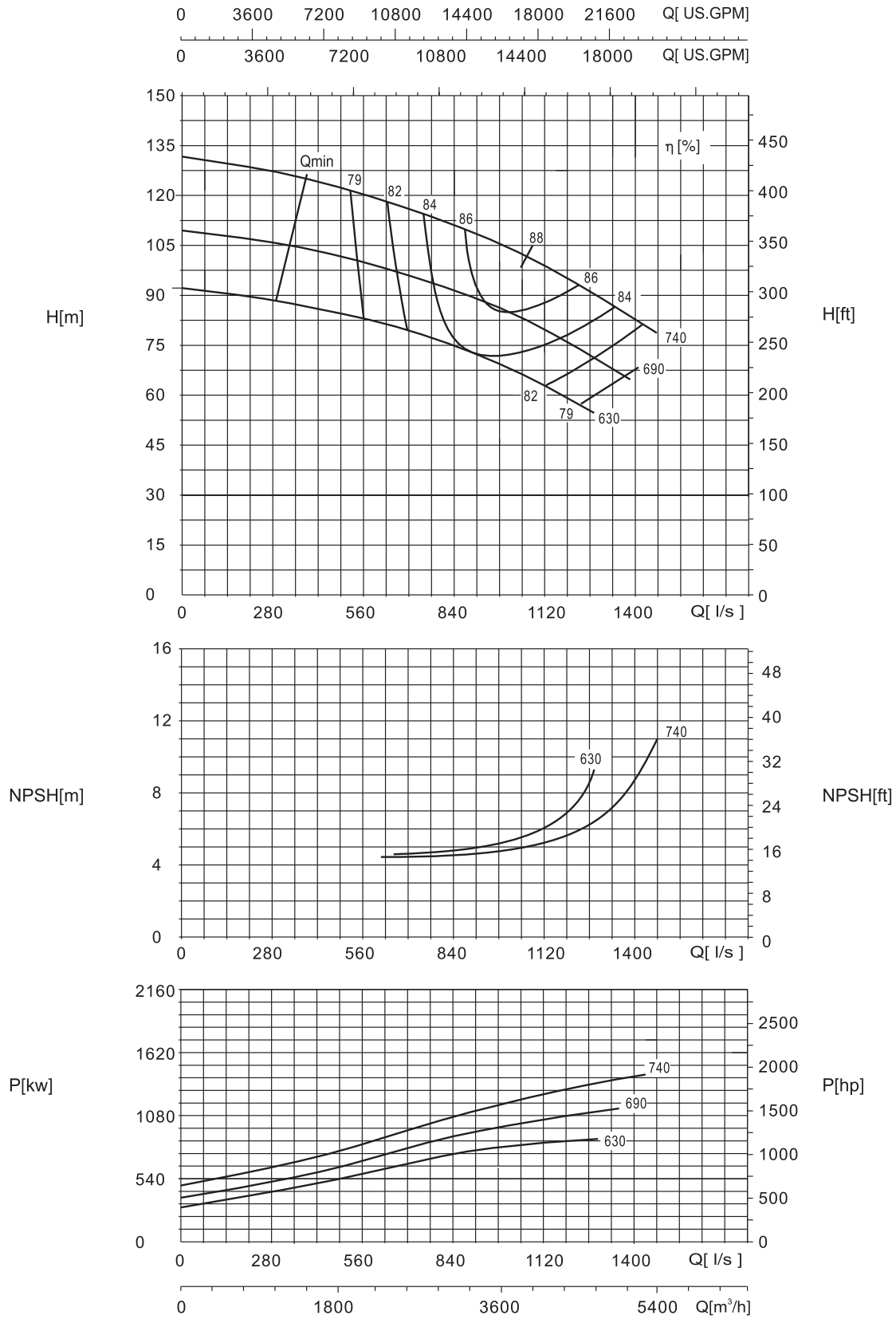

NDS 600-450-640 , n=1180RPM

Head and power ratings apply to media with a density of ρ=1kg-dm³ and a kinetic viscosity of 20mm²/s.

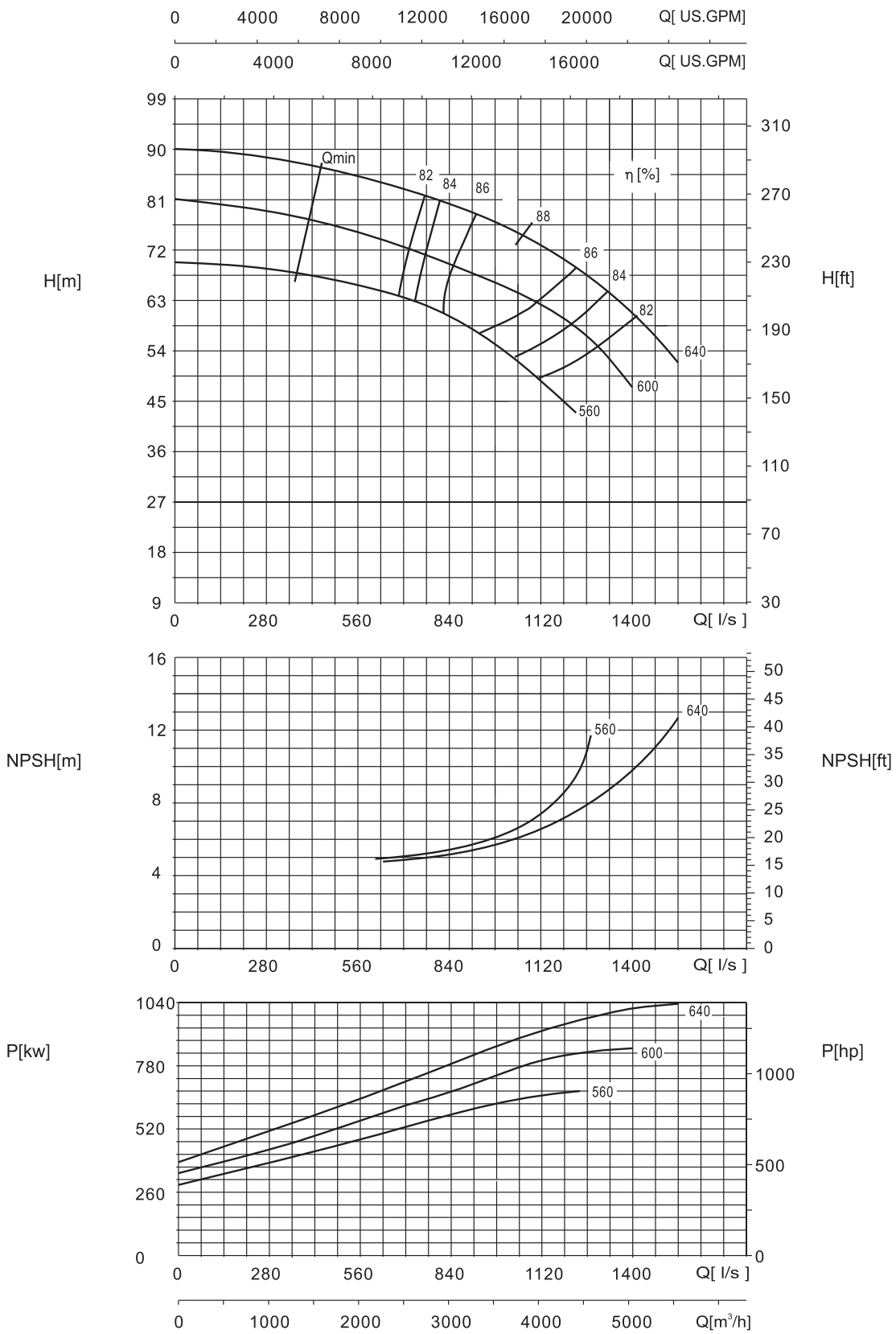

NDS 600-500-520 , n=1180RPM

Head and power ratings apply to media with a density of ρ=1kg-dm³ and a kinetic viscosity of 20mm²/s.

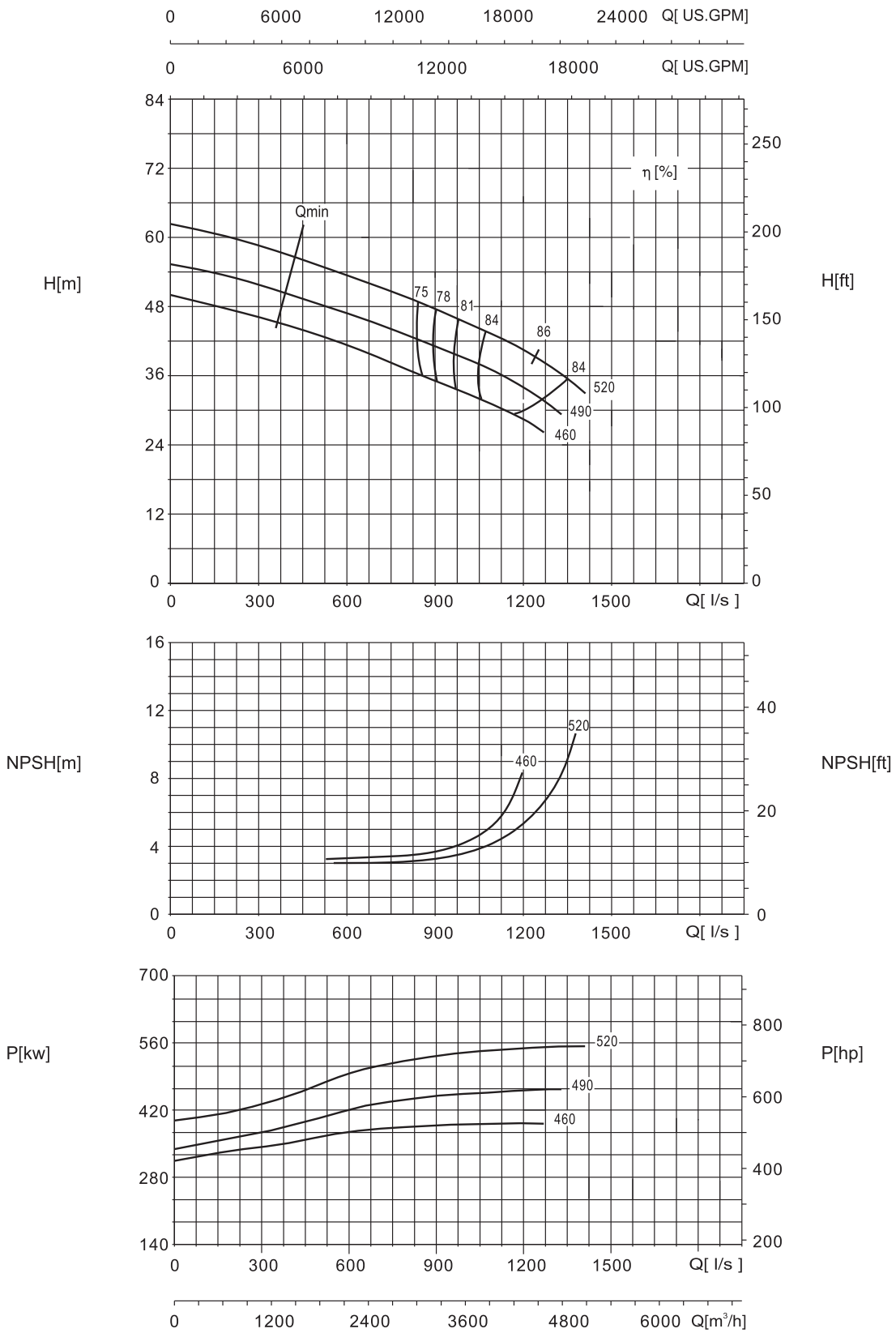

NDS 600-500-550 , n=1180RPM

Head and power ratings apply to media with a density of ρ=1kg-dm³ and a kinetic viscosity of 20mm²/s.

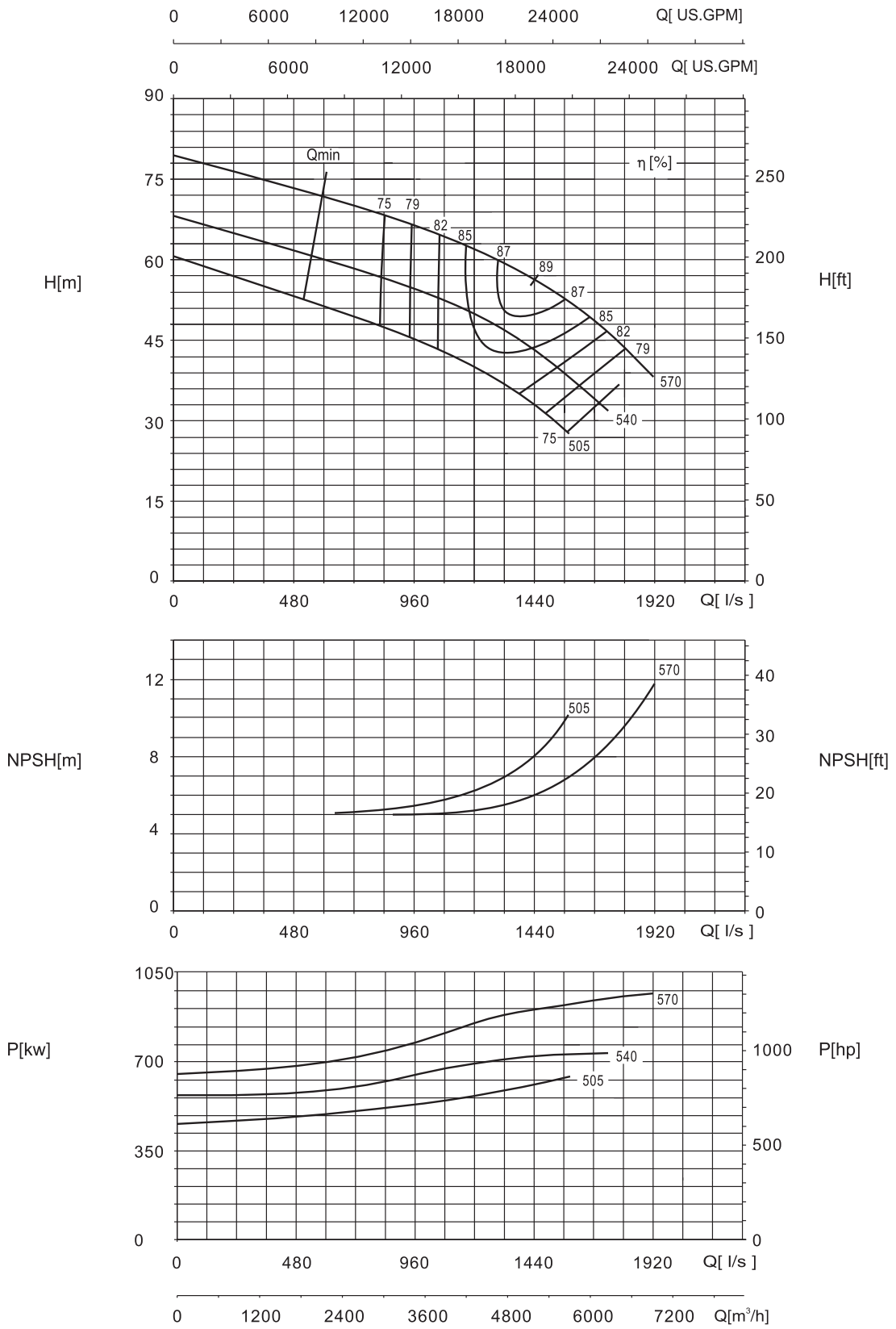

NDS 700-500-670 , n=1180RPM

Head and power ratings apply to media with a density of ρ=1kg-dm³ and a kinetic viscosity of 20mm²/s.

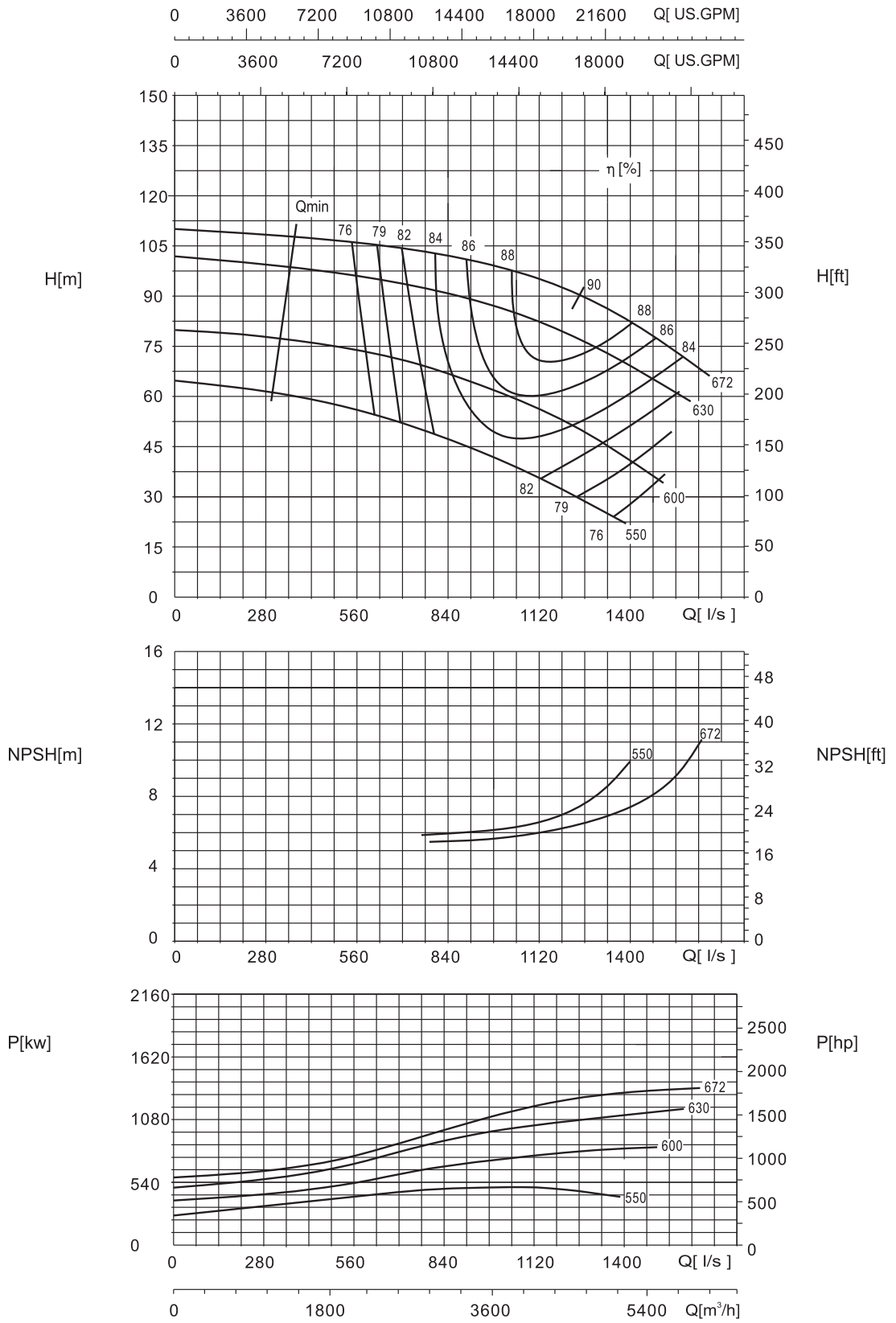

NDS 700-600-600 , n=1180RPM

Head and power ratings apply to media with a density of ρ=1kg-dm³ and a kinetic viscosity of 20mm²/s.

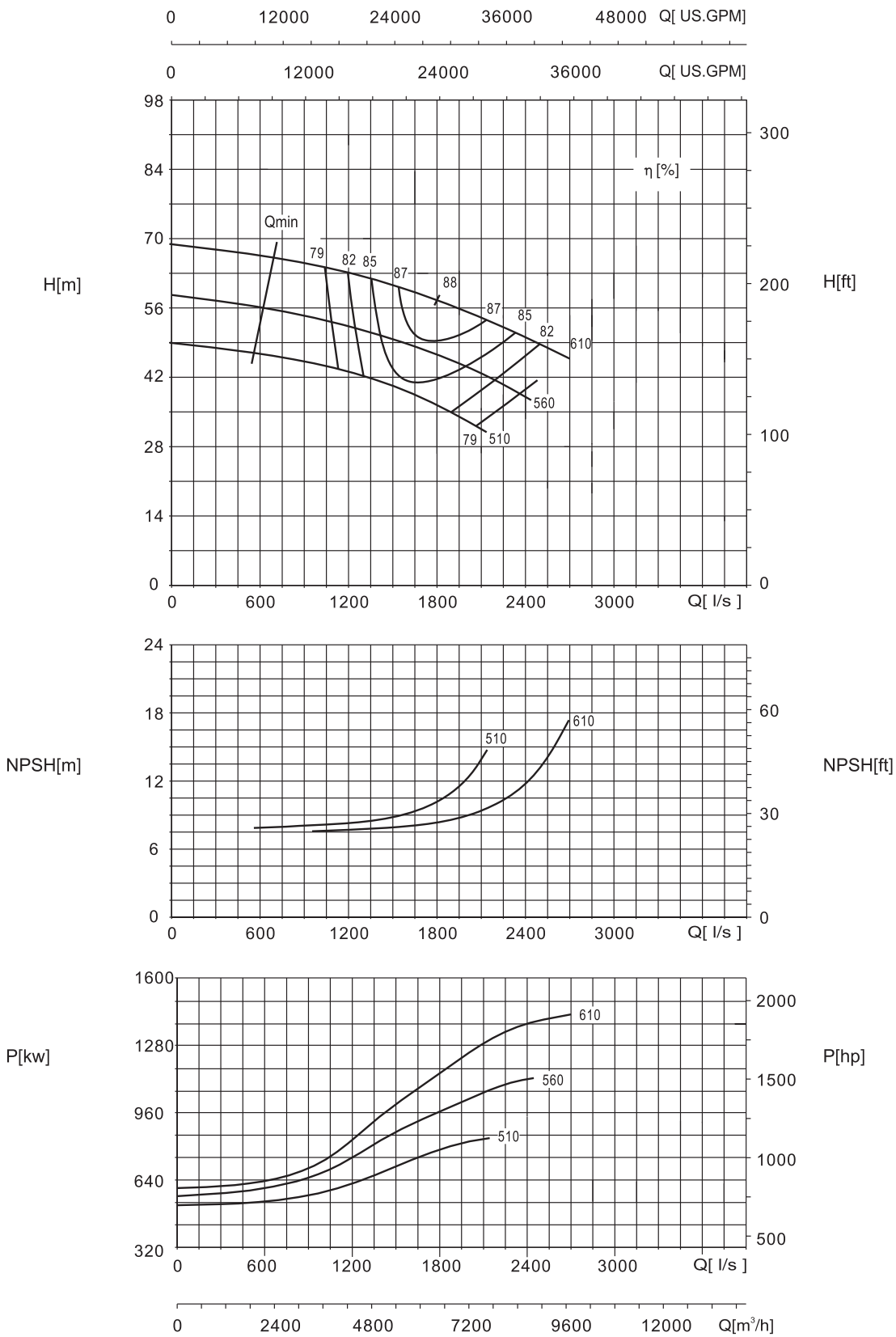

NDS 700-600-740 , n=1180RPM

Head and power ratings apply to media with a density of ρ=1kg-dm³ and a kinetic viscosity of 20mm²/s.

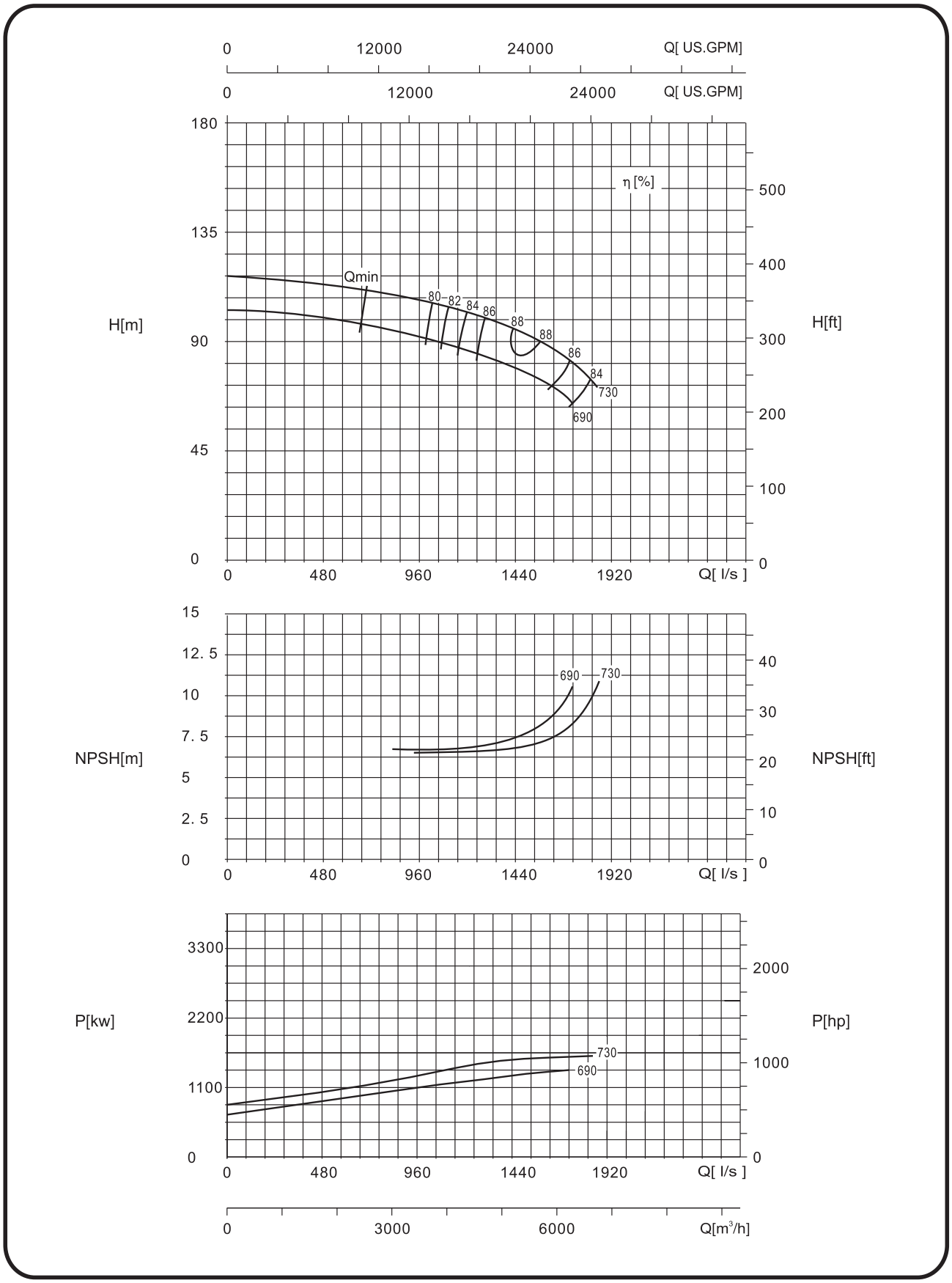

NDS 600-500-580 , n=890RPM

Head and power ratings apply to media with a density of ρ=1kg-dm³ and a kinetic viscosity of 20mm²/s.

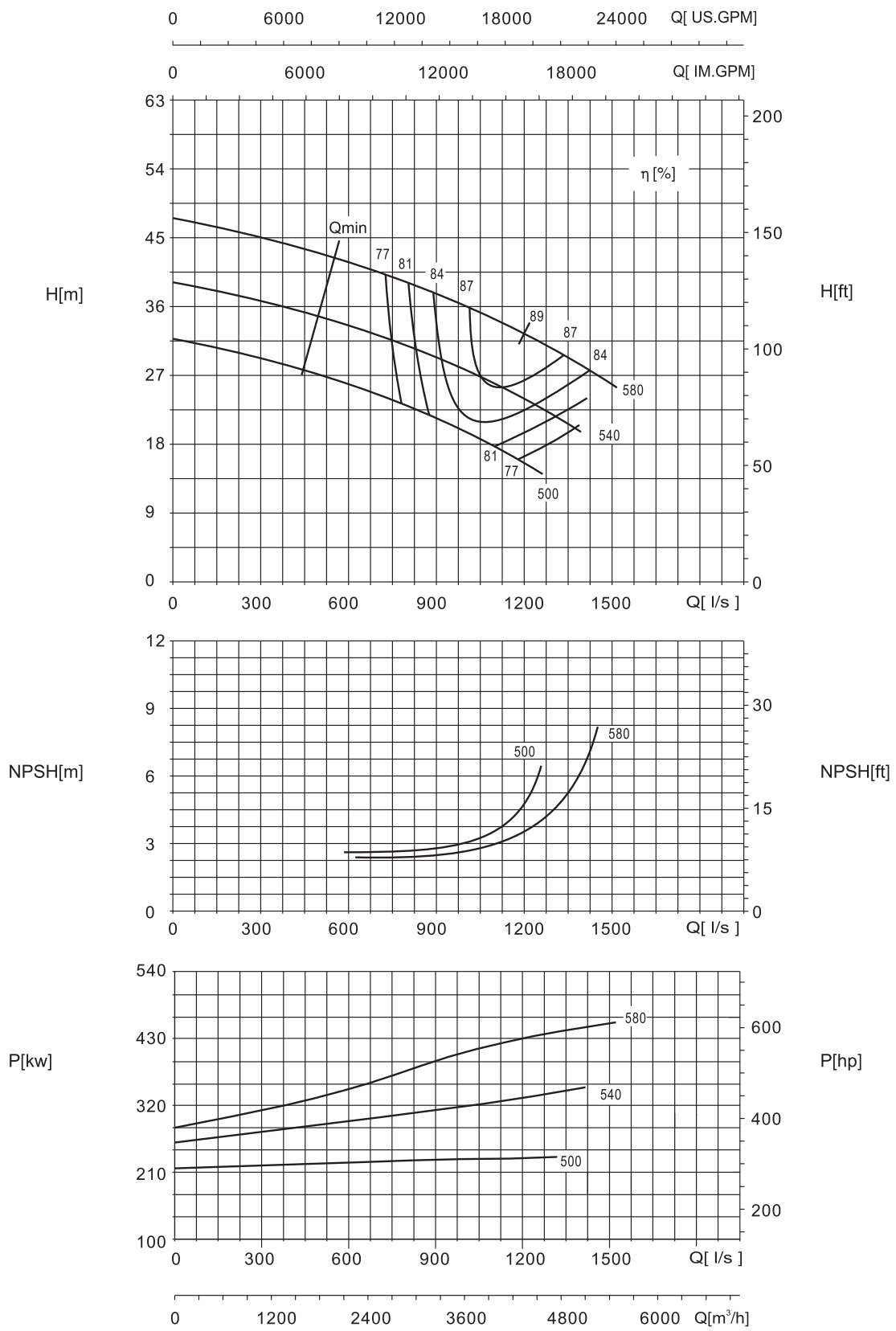

NDS 700-600-680 , n=890RPM

Head and power ratings apply to media with a density of ρ=1kg-dm³ and a kinetic viscosity of 20mm²/s.

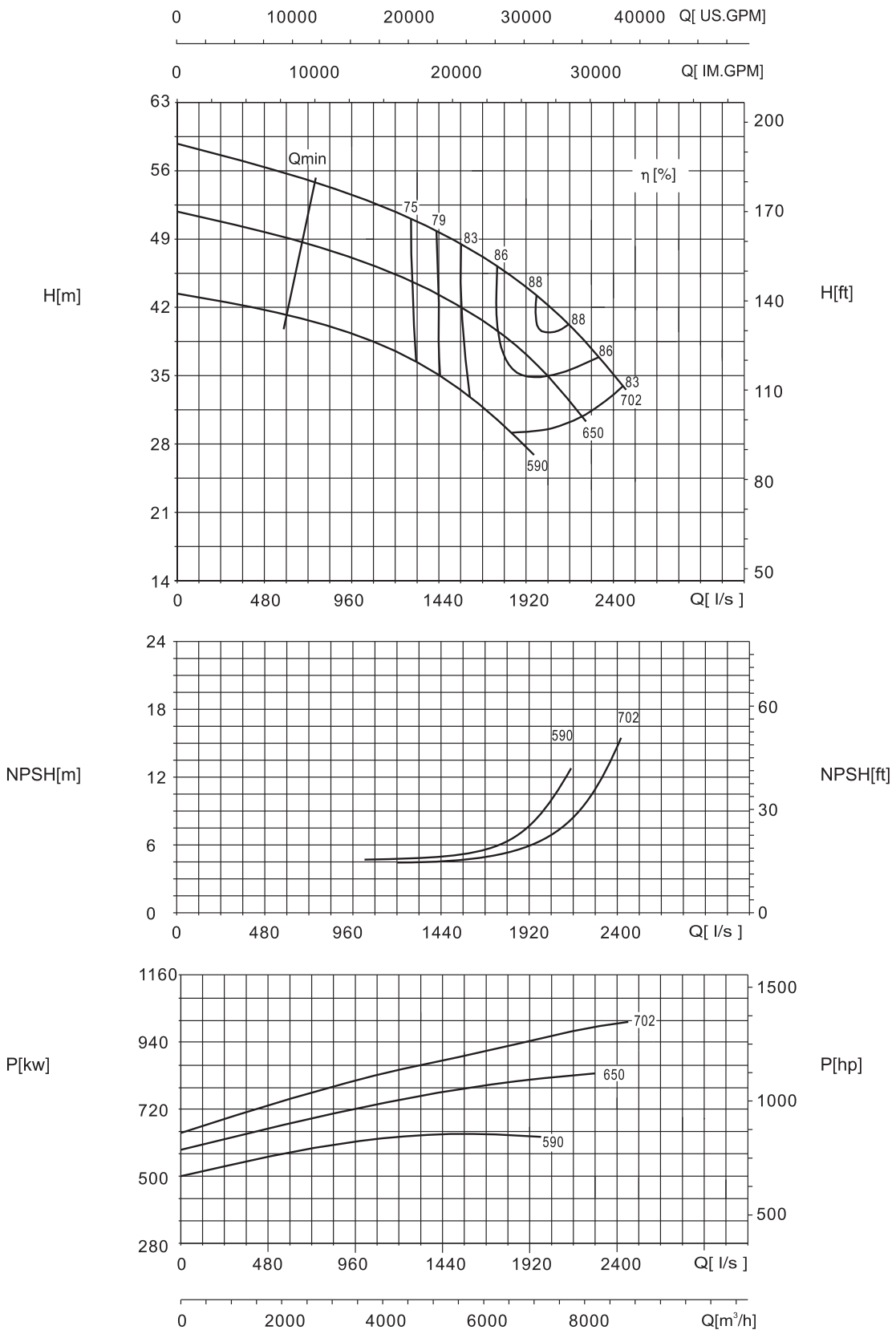

NDS 800-700-750 , n=890RPM

Head and power ratings apply to media with a density of ρ=1kg-dm³ and a kinetic viscosity of 20mm²/s.

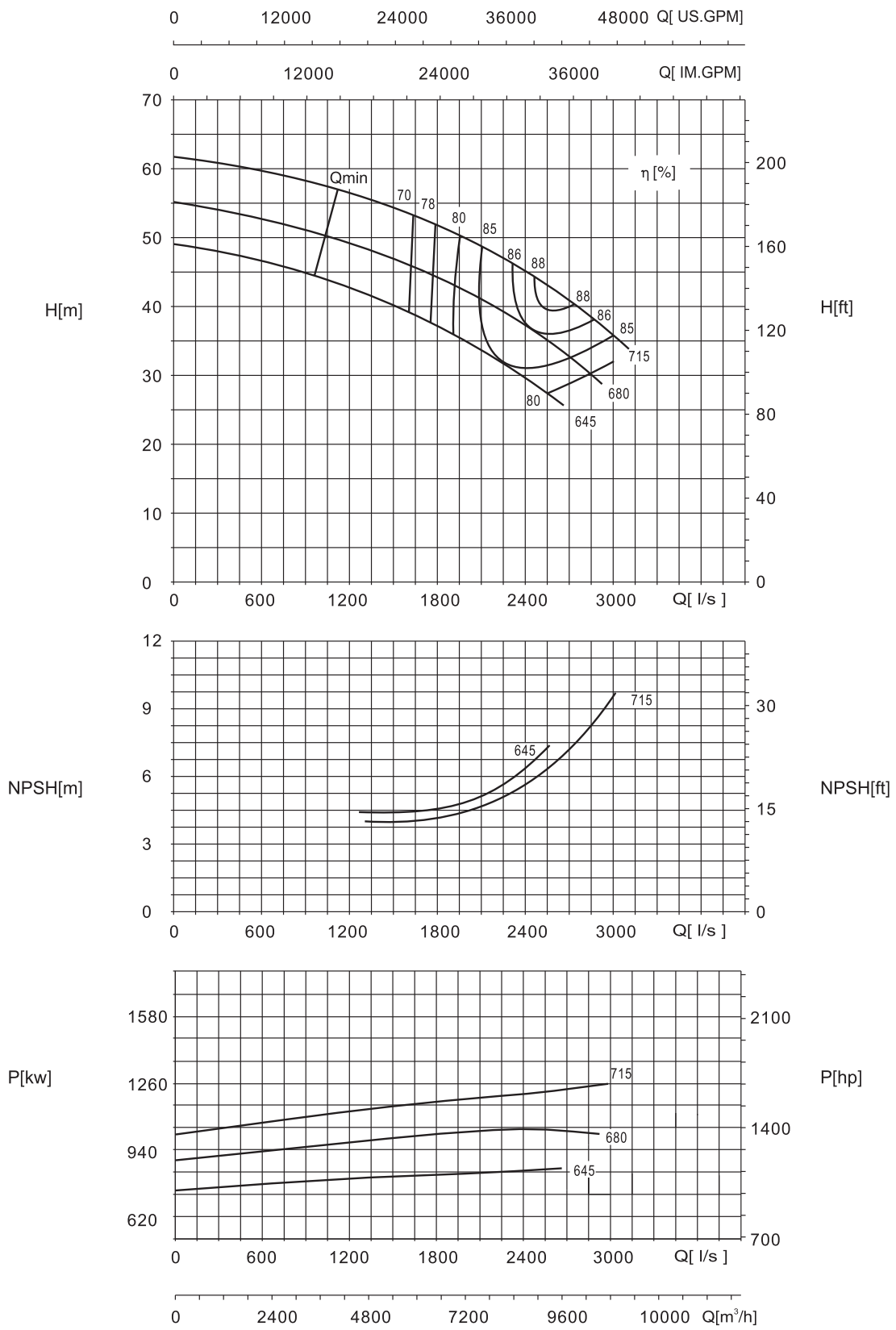

NDS 700-600-680 , n=710RPM

Head and power ratings apply to media with a density of ρ=1kg-dm³ and a kinetic viscosity of 20mm²/s.

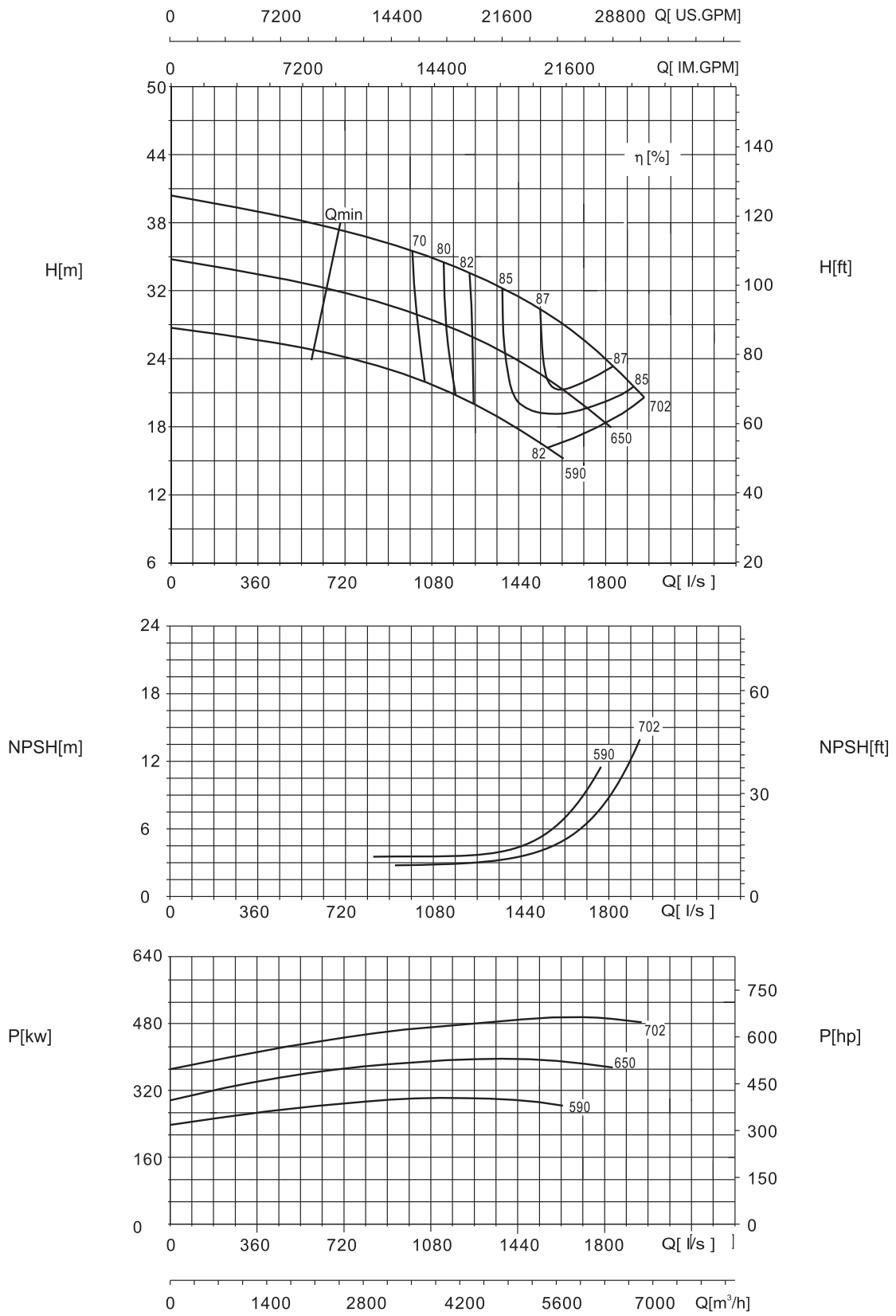

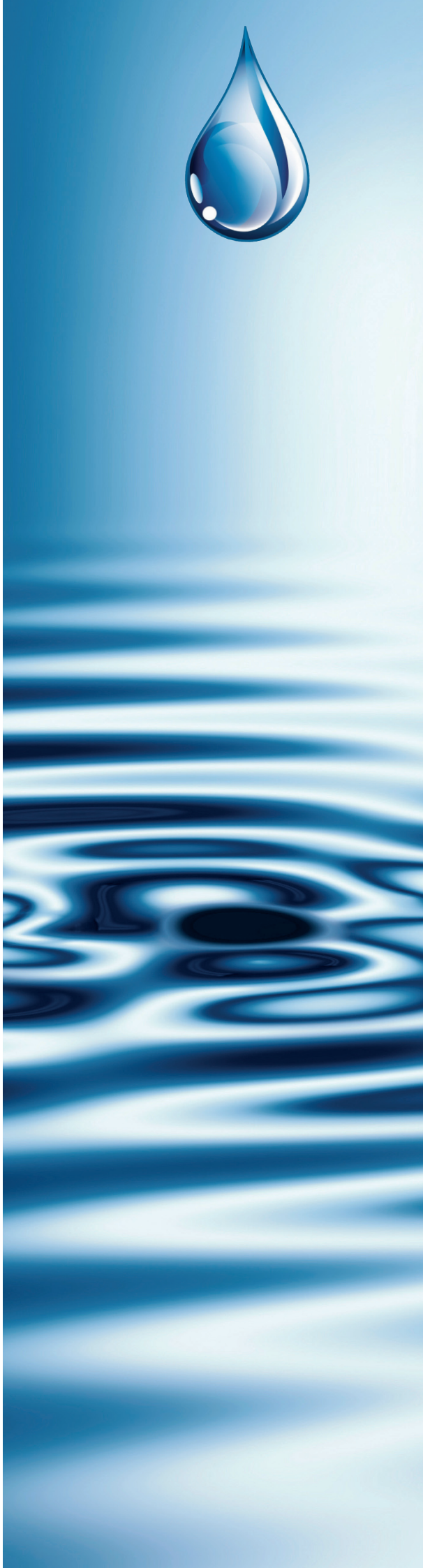

Swiss Pump Company AG
Moosweg 36
CH - 3645 Thun - Gwatt
Switzerland
Tel. +41 33 223 11 00
Fax +41 33 223 11 22
mail@swisspump.com

www.swisspump.com