SPCO

makes life easier

VM, VMC, VMN

Vertical Multistage
Centrifugal Pump, 60Hz

Approvals

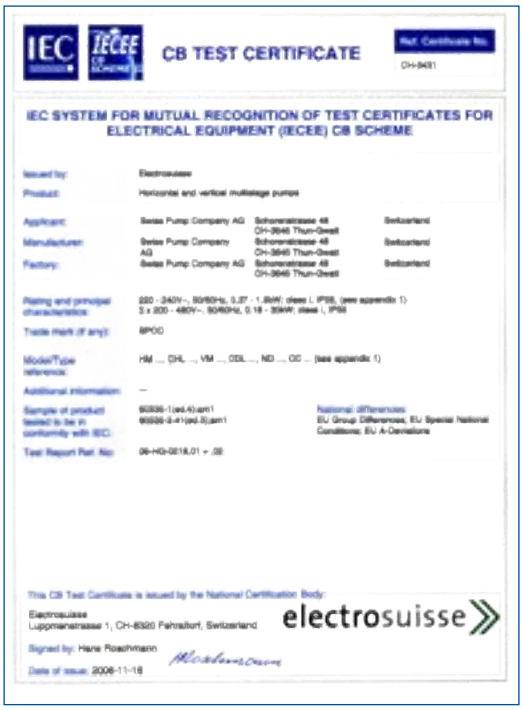

IEC IECEE CB SCHEME

CB TEST CERTIFICATE

Ref. Certificate No.
CH-9431

IEC SYSTEM FOR MUTUAL RECOGNITION OF TEST CERTIFICATES FOR ELECTRICAL EQUIPMENT (IECEE) CB SCHEME

Issued by:	Electrosuisse		
Product:	Horizontal and vertical multistage pumps		
Applicant:	Swiss Pump Company AG	Schoenaustrasse 48 CH-3645 Thun-Gwatt	Switzerland
Manufacturer:	Swiss Pump Company AG	Schoenaustrasse 48 CH-3645 Thun-Gwatt	Switzerland
Factory:	Swiss Pump Company AG	Schoenaustrasse 48 CH-3645 Thun-Gwatt	Switzerland
Rating and principal characteristics:	220 - 240V~, 50/60Hz, 0,37 - 1,8kW, class I, IP55, (see appendix 1) 3 x 200 - 480V~, 50/60Hz, 0,18 - 30kW, class I, IP55		
Trade mark (if any):	SPOO		
Model/Type reference:	HM ..., CHL ..., VM ..., CDL ..., ND ..., CC ... (see appendix 1)		
Additional information:	–		
Sample of product tested to be in conformity with IEC:	60335-1(ed.4);am1 60335-2-41(ed.3);am1	National differences: EU Group Differences; EU Special National Conditions; EU A-Deviations	
Test Report Ref. No:	06-HG-0218.01 + .02		

This CB Test Certificate is issued by the National Certification Body:

Electrosuisse
Luppmenstrasse 1, CH-8320 Fehraltorf, Switzerland

electrosuisse

Signed by: Hans Roschmann

Date of issue: 2006-11-16

IQNet®

THE INTERNATIONAL CERTIFICATION NETWORK

CERTIFICATE

IQNet and SQS
hereby certify that the organisation

Swiss Pump Company AG
3645 Thun-Gwatt
Switzerland

Certified area
Whole Company

Field of activity
Design, development, manufacture and sale of products for the transportation of liquids

has implemented and maintains a
Management System
which fulfills the requirements of the following standard(s)

ISO 9001:2008

Scope No(s): 17, 18, 19
Issued on: 2012-02-20
Validity date: 2015-02-19
Registration Number: ***CH-32160***

IQNet

Michael Drechsel
President of IQNet

Roland Glauser
Managing Director SQS

SQS

IQNet Partners*:
AENOR Spain AFNOR Certification France AIB-Vincotte International Belgium ANCE Mexico APCER Portugal CCC Cyprus
CISQ Italy CQC China CQM China CQS Czech Republic Cro Cert Croatia DQS Holding GmbH Germany DS Denmark
ELOT Greece FCAV Brazil FONDONORMA Venezuela ICONTEC Colombia IMNC Mexico INNORPI Tunisia
Inspecta Certification Finland IRAM Argentina JQA Japan KFQ Korea MSZT Hungary Nemko AS Norway NSAI Ireland
PCBC Poland Quality Austria RR Russia SII Israel SIQ Slovenia SIRIM QAS International Malaysia SQS Switzerland SRAC Romania
TEST St Petersburg Russia TSE Turkey YUQS Serbia
IQNet is represented in the USA by: AFNOR Certification, CISQ, DQS Holding GmbH and NSAI Inc.
* The list of IQNet partners is valid at the time of issue of this certificate. Updated information is available under www.iqnet-certification.com

IEC IECEE CB SCHEME

General Data

Performance scope	page	5
Product range		5
Pump		6
Application		6
Definition of model		6
Motor		7
Mechanical seals		7
Material VM, VMC, VMN 1,3,5,10,15,20		8
Material VM, VMC, VMN 32, 45, 64, 90		9
Material VM, VMC, VMN 120, 150		10
Max. inlet pressure		11
Max. working pressure		11
Pumped liquids		12

Technical Data

VM, VMC, VMN 1	page	14
VM, VMC, VMN 3		16
VM, VMC, VMN 5		18
VM, VMC, VMN 10		20
VM, VMC, VMN 15		22
VM, VMC, VMN 20		24
VM, VMC, VMN 32		26
VM, VMC, VMN 45		28
VM, VMC, VMN 64		30
VM, VMC, VMN 90		32
VM, VMC, VMN 120		34
VM, VMC, VMN 150		36

Vertical Multistage Pumps

English - SPCO High Pressure Pumps VM, VMN, VMC with pumping pressure up to 280 meter and flow up to 180 m3/h. All essential parts like shaft, impellers and intermediate chambers are fully stainless steel AISI 304 (W-Nr. 1.43.01). On request the complete pump can be supplied in stainless steel or with higher grad stainless steel AISI 316 (W-Nr. 1.44.01). Usually the pumps are equipped with mechanical seals tungsten carbide/carbon. Special seals are applied according to the pumping liquid. The pumps have got high efficiency.

Deutsch - SPCO Hochdruckpumpen der Baureihe VM, VMN, VMC mit Förderhöhen bis zu 280 Metern und Fördermengen bis zu 180 m3/h. Sämtliche wesentlichen Teile, wie zum Beispiel die Welle, Laufräder und Zwischenkammern sind komplett aus Edelstahl AISI 304 (W-Nr. 1.43.01) gefertigt. Die Pumpen sind auch komplett in Edelstahl oder sogar in höheren Legierungen AISI 316 (W-Nr. 1.44.01) lieferbar. Standardgemäss kommen die Gleitringdichtungen Kohle – Hartmetall zum Einsatz oder andere Materialpaarungen entsprechend dem Fördermedium. Die Pumpen zeichnen sich durch einen hohen Wirkungsgrad, geringen Platzbedarf und Wartungsfreiheit aus.

Français - Les pompes de haute pression de l'assortiment VM, VMN, VMC avec hauteurs de propulsion jusqu'à 280 mètres et puissance de propulsion jusqu'à 180 m3/h. Toutes les pièces principales comme par exemple l'axe, les roues libres et les espaces intermédiaires sont entièrement fabriquées en acier inoxydable AISI 304 (W-No. 1.43.01). Les pompes sont également livrables en acier inoxydable uniquement ou même en alliages AISI 316 plus hauts (W-No. 1.44.01). De façon standard, les joints mécanique en charbon et métal dur sont activés ou d'autres, de matériaux correspondant à la propulsion moyenne. Les pompes se distinguent par un haut degré d'efficacité, une demande d'espace moindre et sont libres de maintenance.

Italiano - SPCO – Pompe ad alta pressione VM – VMN – VMC, capaci di prevalenze fino a 280m e portate fino a 180 m3/h. La costruzione prevede ACCIAIO INOX AISI 304 (W-Nr. 1.43.01) per le parti essenziali come giranti, albero e camere intermedie. A richiesta possono essere fornite completamente in ACCIAIO INOX AISI 316 (W-Nr. 1.44.01). La tenuta meccanica standard prevede controfacce in carburo di tungsteno e grafite. Tenute meccaniche speciali sono previste per liquidi diversi dall'acqua. Le pompe garantiscono un alto rendimento, esenti da manutenzione e risparmio di spazio nell'installazione.

Performance Scope

The perfomance curve applies to the VM, VMC and VMN version of the pump.

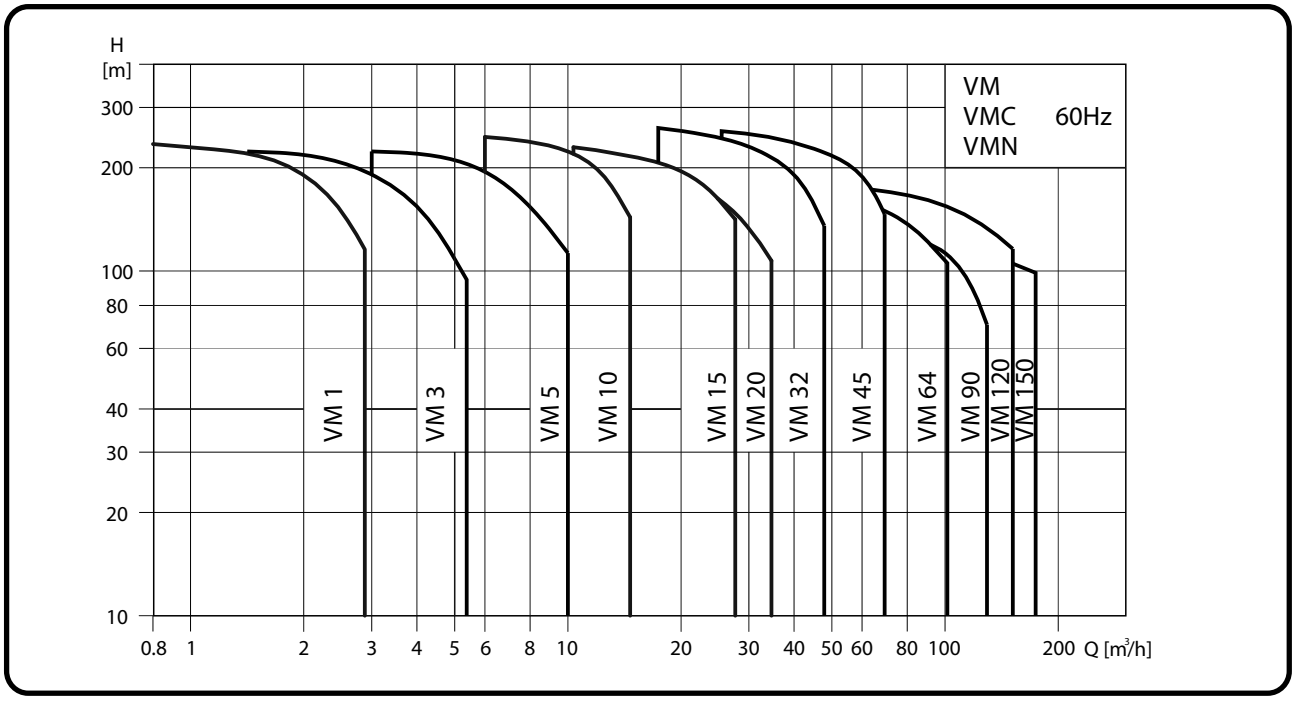

Product range

Range	VM1	VM3	VM5	VM10	VM15	VM20	VM32	VM45	VM64	VM90	VM120	VM150
Nominal flow [m^3/h]	1.2	3.6	6	12	18	24	38	54	77	108	140	180
Flow range[m^3/h]	0.8~2.9	1.5~5.4	3~10	6~15.5	10.5~28	12.5~35	18~48	26~70	36~102	54~146	60~160	75~180
Max. pressure [bar]	23.5	23.3	23	24.5	23.5	20.5	27	26	17.8	15.9	18.5	15.3
Motor power [kW]	0.37~3.0	0.37~4.0	0.55~7.5	0.75~11	1.5~18.5	2.2~18.5	2.2~30	5.5~45	7.5~45	11~45	18.5~75	18.5~75
Fluid temperature [°C]	-15 to +120											
Type												
VM	•	•	•	•	•	•	•	•	•	•	•	•
VMC / VMN	•	•	•	•	•	•	•	•	•	•	•	•
VM Pipe Connection												
Flange	DN25 DN32	DN25 DN32	DN25 DN32	DN40	DN50	DN50	DN65	DN80	DN100	DN100	DN125	DN125
VMC / VMN Pipe Connection												
Flange	DN25 DN32	DN25 DN32	DN25 DN32	DN40	DN50	DN50	DN65	DN80	DN100	DN100	DN125	DN125
Victaulic Connection	R1¼ DN32	R1¼ DN32	R1¼ DN32	R2 DN50	R2 DN50	R2 DN50						

Pump

VM, VMC, VMN is a kind of vertical non-self priming vertical multistage pump of in line design, flange or with Victaulic coupling with equally sized suction and descharge ports. Stage construction with stainless steel impellers, chambers and pressure casing. Pump stub shaft and motor shaft of the IEC- standards motor are directly close coupled. All pumps are equipped with a catridge type mechanical seal for easy maintenance.
This kind of pump have different pump sizes and various numbers of stages to provide the flow and the pressure required.

Application

VM, VMC and VMN pumps is a kind of multifunctional products. It can be used to convey various medium from tap water to industrial liquid at different temperature and with different flow rate and pressure.
VM type is applicable to conveying non-corrosive liquid, while VMN and VMC is suitable for slightly corrosive liquid.

- Water supply and pressure boosting: Pressure boosting in buildings, hotels, residential complexes Pressure booster stations, supply of water networks Pressure boosting for industrial water supply.
- Light industry: Washing and cleaning systems, Car washing facilities, Fire fighting systems, Process water systems, Machine tools (cooling lubricants).
- Heating, Ventialation and Air-Conditioning: Boilers, Induction heating, Heat exchangers, Refrigerators, Cooling towers and systems, Temperature control systems.
- Irrigation and Agriculture: Greenhouses, Sprinkler irrigation, Field irrigation (flooding).
- Water Treatment: Water softeners and de-mineralization, Reverse Osmosis systems, Distillation systems, Filtration, Ultra-filtration systems.

Definition of Model

VMN 10 - 5 - SQQE

- SQQE — Code for shaft seal
- 5 — Stage
- 10 — Rated flow m^3/h

VM Vertical multistage centrifugal pump

VMC Flow passage components stainless steel 304

VMN Flow passage components stainless steel 316

Motor

The pump is fitted with a totally enclosed , fan cooled squirrel-cage 2 pole high efficiency motor.

- Protection class: IP55
- Insulation class: F
- Ambient temperature: Max. + 52 °C
- Standard voltage: P2: 0.37~1.1kW 3x220-255 / 380-440V
  P2: 1.5~7.5kW 3x220-277 / 380-480V
  P2: from 11kW 3x220/380/440V

Motor Type					Nominal current [A]			
HP	**KW**	**Pole**	**Flange**	**Frame**	**3 x 220 V**	**3 x 255 V**	**3 x 380 V**	**3 x 440 V**
0.5	0.37	2	B14	71	1.7	1.7	1	1
0.75	0.55			71	2.6	2.4	1.5	1.4
1.0	0.75			80	3.1	2.9	1.8	1.7
1.5	1.1			90S	4.8	4.5	2.8	2.6
					3 x 220 V	**3 x 277 V**	**3 x 380 V**	**3 x 480 V**
2.0	1.5			90L	5.7	5.5	3.3	3.2
3.0	2.2			90L	8.6	8.8	5	5.1
4.0	3.0			100L	6.9	10.4	6.3	6
5.5	4.0			112M	14.4	13.2	8.3	7.6
7.5	5.5		B5	132S	19.2	18.2	11.1	10.5
10	7.5			132M	26.3	27.8	15.2	16.1
					3 x 220 V		**3 x 380 V**	**3 x 440 V**
15	11			160M	37.5		22.7	18.8
20	15			160M	50		28.9	25
25	18.5			160L	60.3		34.9	30.1
30	22			180M	71.1		41.5	35.8
40	30			180M	97		56.1	48.5
50	37			200L	118		68.3	59
60	45			200L	143		82.8	71.5
75	55			250M	174		100	86.8
100	75			280S	235		136	118

Mechanical Seals

Standard Cartridge type Mechanical seal made of Silicon Carbide/Silicon Carbide/EPDM or Viton.
Based on the type of application, alternative materials are available for the seal and the elastomers.
The catridge type mechanical seal can be replaced in minutes without special tools and without dismantling the pump.

Seal Type	VM	VMC	VMN
Mechanical Seals			
Cartridge seal	●	●	●
QQ	●	●	●
UU	Optional	Optional	Optional
QB	Optional	Optional	Optional
UB	Optional	Optional	Optional
Seals			
EPDM	●	●	●
Viton	●	●	●

- Q: Silicon carbide
- U: Tungsten carbide
- B: Carbon

Section drawing VM 1,3,5,10,15,20 and material list

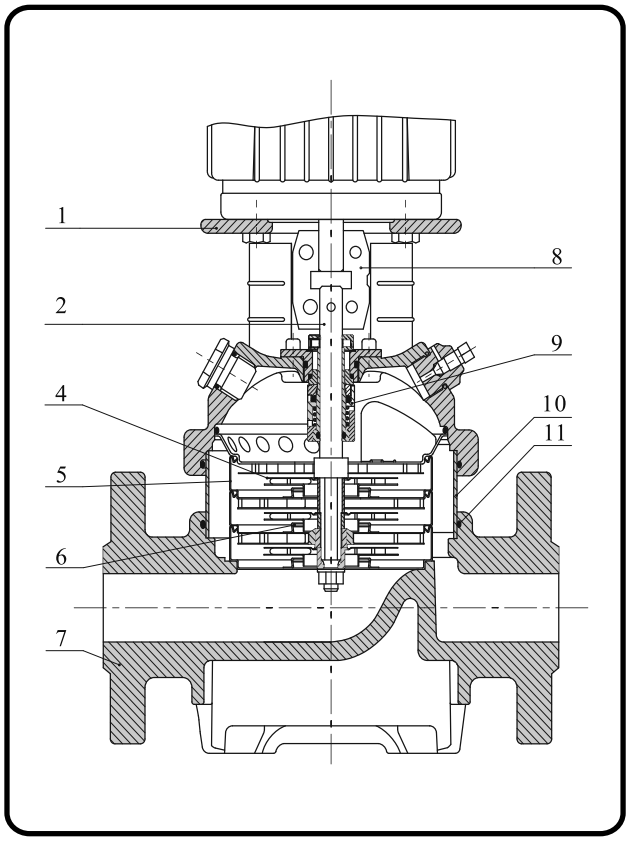

No.	Name	Material	AISI / ASTM
1	Pump head	cast iron	ASTM25B
2	Shaft	stainless steel	AISI 431 AISI 316L
4	Impeller	stainless steel	AISI 304 AISI 316L
5	Chamber	stainless steel	AISI 304 AISI 316L
6	Neck ring	PTFE	
7	Base	cast iron	ASTM25B
8	Coupling	Fe-Cu-C	
9	Mechanical seal	cartridge type	
10	Outer sleeve	stainless steel	AISI 304 AISI 316L
11	O-ring for outer sleeve	EPDM	

Section drawing VMC, VMN 1,3,5,10,15,20 and material list

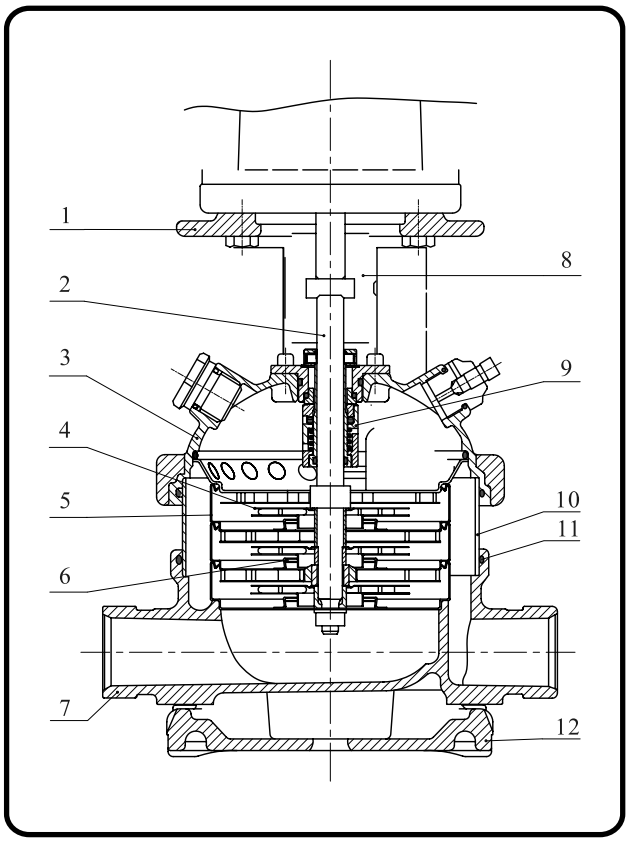

No.	Name	Material	AISI / ASTM
1	Pump head	cast iron	ASTM25B
2	Shaft	stainless steel	AISI 431 AISI 316L
4	Impeller	stainless steel	AISI 304 AISI 316L
5	Chamber	stainless steel	AISI 304 AISI 316L
6	Neck ring	PTFE	
8	Coupling	Fe-Cu-C	
9	Mechanical seal	cartridge type	
10	Outer sleeve	stainless steel	AISI 304 AISI 316L
11	O-ring for outer sleeve	EPDM	
VMC			
3	Pump head cover	stainless steel	AISI 304
7	Base	stainless steel	AISI 304
12	Base plate	cast iron	ASTM25B
VMN			
3	Pump head cover	stainless steel	AISI 316
7	Base	stainless steel	AISI 316
12	Base plate	cast iron	ASTM25B

Section drawing VM 32,45,64,90 and material list

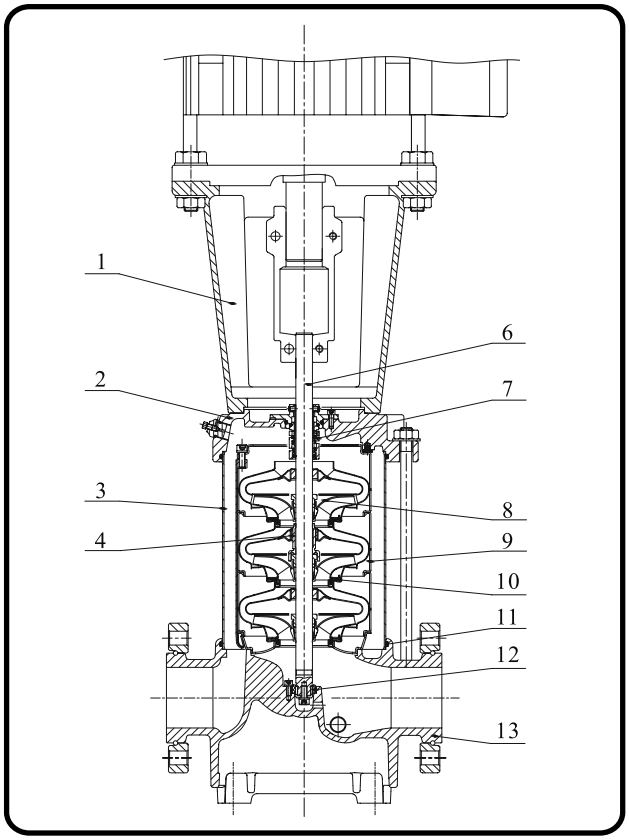

No.	Name	Material	AISI / ASTM
1	Motor bracket	cast iron	ASTM25B
2	Pump head	cast iron	ASTM35B
3	Outer sleeve	stainless steel	AISI 304 AISI 316L
4	Bearing ring	bronze	
6	Shaft	stainless steel	AISI 431 AISI 316L
7	Mechanical seal	cartridge type	
8	Impeller	stainless steel	AISI 304 AISI 316L
9	Chamber	stainless steel	AISI 304 AISI 316L
10	Neck ring	carbon fiber	
11	O-ring for outer sleeve	EPDM	
12	Bottom bearing ring	tungsten carbide	
13	Base	cast iron	ASTM35B

Section drawing VMC, VMN 32,45,64,90 and material list

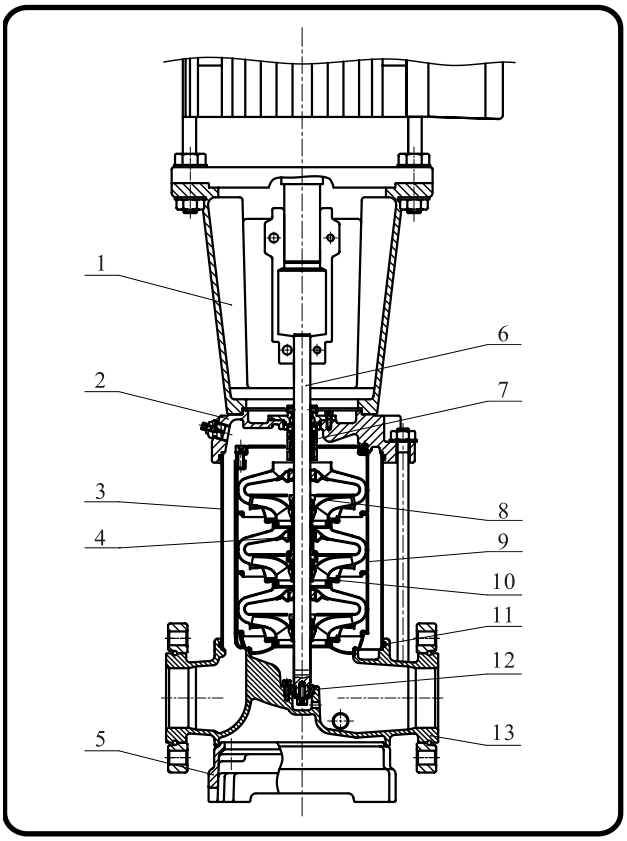

No.	Name	Material	AISI / ASTM
1	Motor bracket	cast iron	ASTM25B
3	Outer sleeve	stainless steel	AISI 304 AISI 316L
6	Shaft	stainless steel	AISI 431 AISI 316L
7	Mechanical seal	cartridge type	
8	Impeller	stainless steel	AISI 304 AISI 316L
9	Chamber	stainless steel	AISI 304 AISI 316L
10	Neck ring	carbon fiber	
11	O-ring for outer sleeve	EPDM	
12	Bottom bearing ring	tungsten carbide	
VMC			
2	Pump head	stainless steel	AISI 304
4	Bearing ring	bronze	
5	Base plate	cast iron	ASTM35B
13	Base	stainless steel	AISI 304
VMN			
2	Pump head	stainless steel	AISI 316
4	Bearing ring	POB+graphite+PTFE	
5	Base plate	cast iron	ASTM35B
13	Base	stainless steel	AISI 316

Section drawing VM 120, 150 and material list

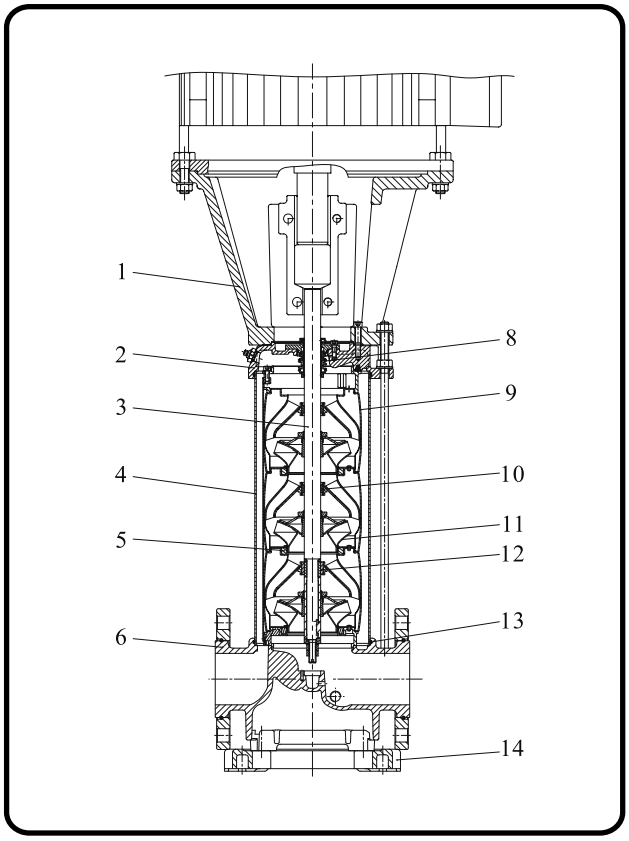

No.	Name	Material	AISI / ASTM
1	Motor bracket	cast iron	ASTM35B
2	Pump head	cast iron	ASTM35B
3	Shaft	stainless steel	AISI 431 AISI 316L
4	Outer sleeve	stainless steel	AISI 431 AISI 316L
5	Neck ring	PTFE	
6	Base	cast iron	ASTM35B
8	Mechanical seal	cartridge type	
9	Chamber	stainless steel	AISI 304 AISI 316L
10	Bearing ring	PTFE	
11	Impeller	stainless steel	AISI 304 AISI 316L
12	Bottom bearing ring	SIC / SIC	
13	O-ring for outer sleeve	EPDM	
14	Base plate	cast iron	ASTM65-45-12

Section drawing VMC, VMN 120, 150 and material list

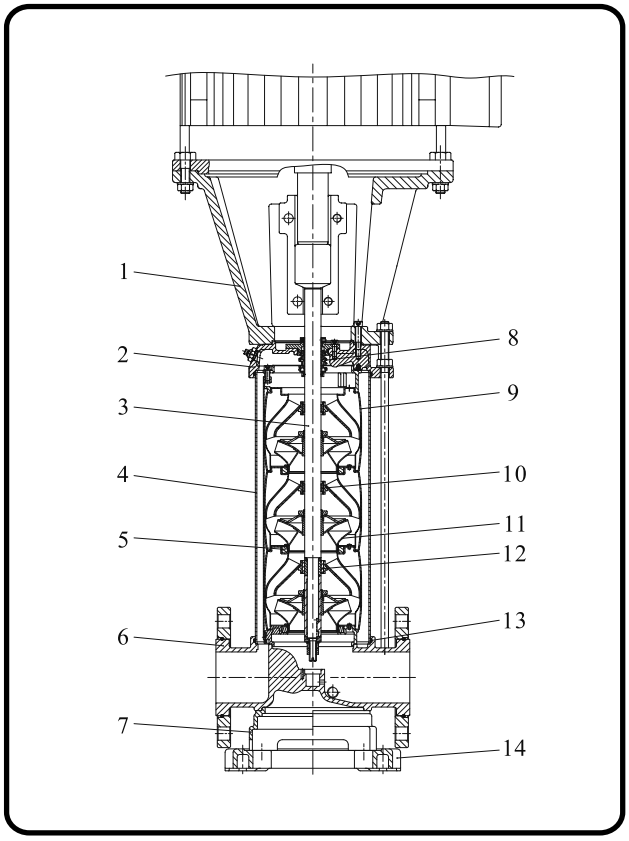

No.	Name	Material	AISI / ASTM
1	Motor bracket	cast iron	ASTM35B
3	Shaft	stainless steel	AISI 431 AISI 316L
4	Outer sleeve	stainless steel	AISI 431 AISI 316L
5	Neck ring	PTFE	
8	Mechanical seal	cartridge type	
9	Chamber	stainless steel	AISI 304 AISI 316L
10	Bearing ring	PTFE	
11	Impeller	stainless steel	AISI 304 AISI 316L
12	Bottom bearing ring	SIC / SIC	
13	O-ring for outer sleeve	EPDM	
14	Base plate	cast iron	ASTM65-45-12
VMC			
2	Pump head	stainless steel	AISI 304
6	Base	stainless steel	AISI 304
7	Base plate	cast iron	ASTM65-45-12
VMN			
2	Pump head	stainless steel	AISI 316
6	Base	stainless steel	AISI 316
7	Base plate	cast iron	ASTM65-45-12

Max. inlet pressure

Model	Max. inlet pressure
VM, VMC, VMN 1	
VM, VMC, VMN 1-2 ~ 1-27	10 bar
VM, VMC, VMN 3	
VM, VMC, VMN 3-2 ~ 3-15	10 bar
VM, VMC, VMN 3-17 ~ 3-25	15 bar
VM, VMC, VMN 5	
VM, VMC, VMN 5-2 ~ 5-9	10 bar
VM, VMC, VMN 5-10 ~ 5-24	15 bar
VM, VMC, VMN 10	
VM, VMC, VMN 10-1 ~ 10-5	8 bar
VM, VMC, VMN 10-6 ~ 10-18	10 bar
VM, VMC, VMN 15	
VM, VMC, VMN 15-1 ~ 15-2	8 bar
VM, VMC, VMN 15-3 ~ 15-12	10 bar
VM, VMC, VMN 20	
VM, VMC, VMN 20-1	8 bar
VM, VMC, VMN 20-2 ~ 20-10	10 bar
VM, VMC, VMN 32	
VM, VMC, VMN 32-1-1 ~ 32-2	4 bar
VM, VMC, VMN 32-3-2 ~ 32-6	10 bar
VM, VMC, VMN 32-7-2 ~ 32-10-2	15 bar
VM, VMC, VMN 45	
VM, VMC, VMN 45-1-1 ~ 45-1	4 bar
VM, VMC, VMN 45-2-2 ~ 45-3	10 bar
VM, VMC, VMN 45-4-2 ~ 45-7	15 bar
VM, VMC, VMN 64	
VM, VMC, VMN 64-1-1	4 bar
VM, VMC, VMN 64-1 ~ 64-2-1	10 bar
VM, VMC, VMN 64-2 ~ 64-5-2	15 bar
VM, VMC, VMN 90	
VM, VMC, VMN 90-1-1 ~ 90-2-2	10 bar
VM, VMC, VMN 90-2-1 ~ 90-4-2	15 bar
VM, VMC, VMN 120	
VM, VMC, VMN 120-1	10 bar
VM, VMC, VMN 120-2-2 ~ 120-3-1	15 bar
VM, VMC, VMN 120-3 ~ 120-5-2	20 bar
VM, VMC, VMN 150	
VM, VMC, VMN 150-1-1	10 bar
VM, VMC, VMN 150-1 ~ 150-2	15 bar
VM, VMC, VMN 150-3-2 ~ 150-4-2	20 bar

Max. working pressure

Model	Max. operating pressure
VM, VMC, VMN 1	
VM, VMC, VMN 1-2 ~ 1-27	25 bar
VM, VMC, VMN 3	
VM, VMC, VMN 3-2 ~ 3-25	25 bar
VM, VMC, VMN 5	
VM, VMC, VMN 5-2 ~ 5-24	25 bar
VM, VMC, VMN 10	
VM, VMC, VMN 10-1 - 10-10	16 bar
VM, VMC, VMN 10-12 ~ 10-17	25 bar
VM, VMC, VMN 15	
VM, VMC, VMN 15-1 ~ 15-8	16 bar
VM, VMC, VMN 15-9 ~ 15-12	25 bar
VM, VMC, VMN 20	
VM, VMC, VMN 20-1 ~ 20-7	16 bar
VM, VMC, VMN 20-8 ~ 20-10	25 bar
VM, VMC, VMN 32	
VM, VMC, VMN 32-1-1 ~ 32-5	16 bar
VM, VMC, VMN 32-6-2 ~ 32-10-2	30 bar
VM, VMC, VMN 45	
VM, VMC, VMN 45-1-1 ~ 45-4	16 bar
VM, VMC, VMN 45-5-2 ~ 45-7	30 bar
VM, VMC, VMN 64	
VM, VMC, VMN 64-1-1 ~ 64-3	16 bar
VM, VMC, VMN 64-4-2 ~ 64-5-2	30 bar
VM, VMC, VMN 90	
VM, VMC, VMN 90-1-1 ~ 90-3	16 bar
VM, VMC, VMN 90-4-2	30 bar
VM, VMC, VMN 120	
VM, VMC, VMN 120-1 ~ 120-5-2	30 bar
VM, VMC, VMN 150	
VM, VMC, VMN 150-1-1 ~ 150-4-2	30 bar

• Rule to follow: the inlet pressure + the pressure against a closed valve < Max. operating pressure.

Pumped Liquids

VM, VMC, VMN pumps can handle a wide variety of liquids, each with its own characteristic.

VM, VMC

Non-corrosive liquids

For fluid transfer, circulation and pressure boosting of cold or hot clean water.

VMN

Industrial liquids

Light acids

The fluids covered in the list are not complete. Data on the application limits of different pump materials when handling any of the listed fluids are considered to be the best choices. However, the table is intended as a general guide only, and cannot replace actual testing of the pumped fluids and pump materials under specific working conditions.
When choosing the pump version, sufficient attention should be given to the flow medium, such as density, solidification point, viscosity as well as ex-protection requirement. The limits of applicability of the pumps, based on pressure and temperature must also be considered.

Recommended

Pumped fluid	Fluid Concentration, temperature	VM / VMC		VMN	
		EPDM	Viton	EPDM	Viton
Acetic acid anhydride	25°C			●	
Alkaline cleaner		●			
Aluminium sulphate	10%, 25°C				●
Ammonia water (A. hydroxide)	20%, 40°C	●			
Ammonia hydrogen carbonate	10%, 40°C	●		●	
Benzoic acid	10%, 90°C				●
Boric acid	Unsaturated solution, 60°C				●
Butanol	60°C	●			
Calcium acetate	30%, 50°C	●			
Calcium hydroxide	Saturated solution, 50°C	●			
Chromic acid	1%, 20°C				●
Condensate	90°C	●			
Copper sulphate	Unsaturated solution, 60°C				●
Deionic (fully desalinated water)	50°C			●	
Ethanol	100%, 20°C	●			
Ehylene glycol/Diethylene glycol	40%, 70°C	●	●	●	●
Fixer	25°C				●
Formic acid	5%, 20°C			●	

Pumped fluid	Fluid Concentration, temperature	VM / VMC		VMN	
		EPDM	Viton	EPDM	Viton
Fruit juice	50°C				●
Glycerine	50%, 50°C	●			
Heating oil (Light)		●			●
Hydraulic oil	100%, 100°C		●		
Isopropanol		●			
Lactic acid	10%, 20°C				●
Linoleic acid	100%, 20°C	●			
Linseed oil	60°C		●		
Liqueur	60°C				●
Maize oil	80°C		●		
Maleic acid	50%, 50°C				●
Methanol	100%, 20°C	●			
Motor oil	100%, 80°C	●			
Oil-water-mixture	100°C		●		
Oxalic acid	1%, 20°C			●	
Peanut oil	100%, 80°C		●		
Phosphoric acid	20%, 20°C			●	
Polyglycols	90°C		●		●
Polyethylene glycols	40%, 70°C	●			
Potassium carbonate	10%, 60°C	●			
Potassium hydrogen carbonate	10%, 60°C	●			
Potassium permanganate	5%, 20°C			●	
Potassium sulphate	Unsaturated solution, 80°C			●	
Rapeseed oil	100%, 80°C		●		
Silicone oil	100%		●		
Sodium carbonate	10%, 60°C			●	
Sodium hydroxide	25%, 50°C			●	
Sodium nitrate	Unsaturated solution, 80°C			●	
Sodium phosphate	5%, 100°C			●	
Sodium sulphate	10%, 60°C			●	
Sulphuric acid	5%, 25°C				●
Water					
Swimming pool water	35°C	● VMC		●	
Deionic	50°C			●	
Distilled water	50°C			●	
Decarbonated water				●	
Soft water				●	
Heating water				●	
Boiler water				●	
Pure water				●	
Rinsing water		●VMC		●	

VM1 / VMC1 / VMN1

Performance Curves

The perfomance curve applies to the VM, VMC and VMN version of the pump.

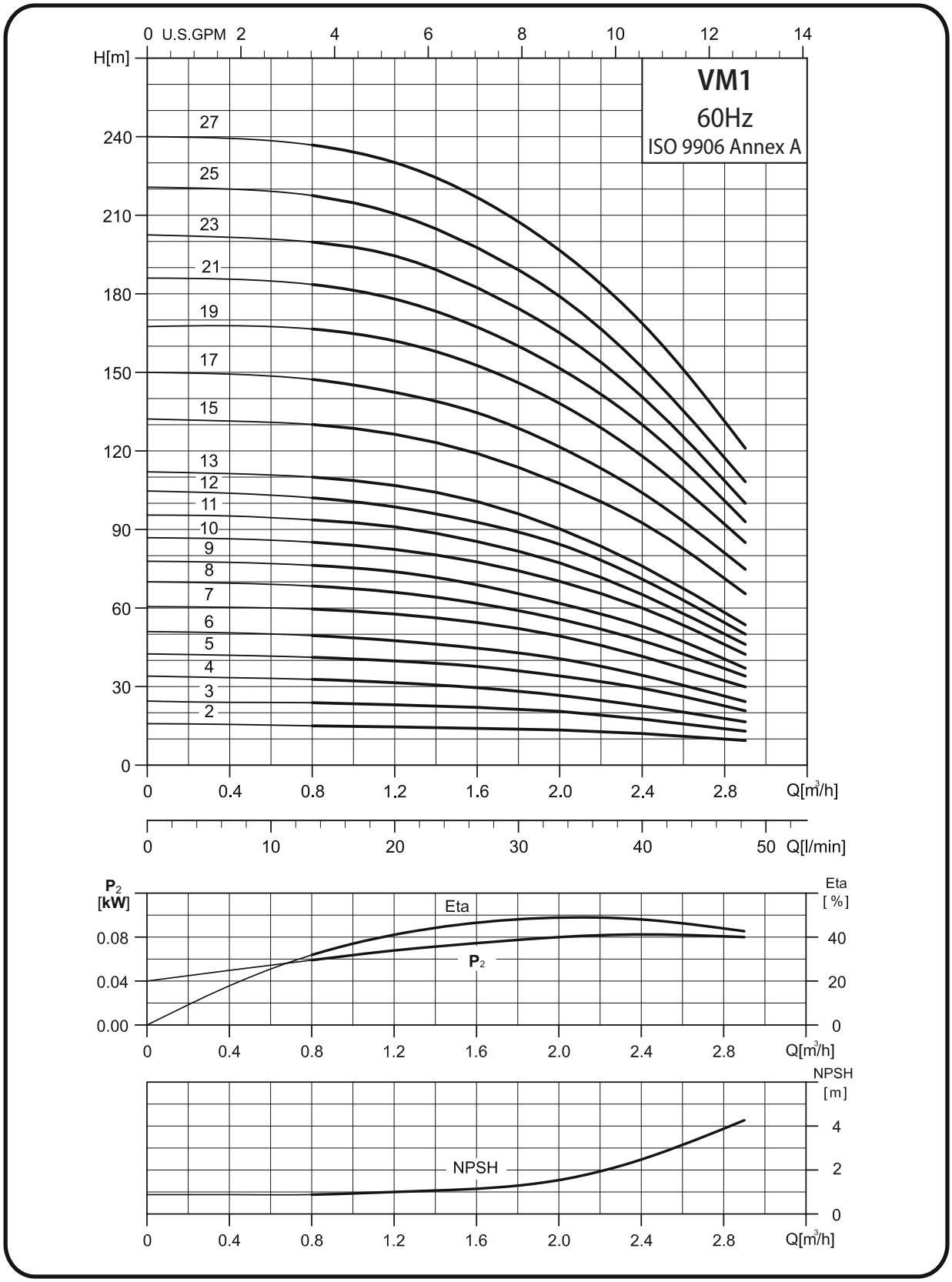

Dimensional sketch - VM1

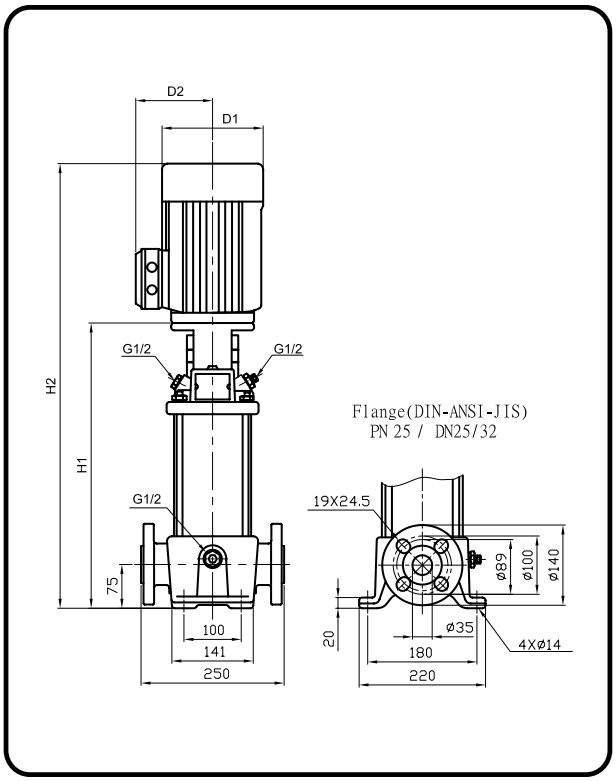

Dimensions and Weight - VM1

Model	Motor P_2 [kW]	Dimension [mm]				Net weight [kg]
		H1	H2	D1	D2	
VM 1-2	0.37	279	470	141	109	23.0
VM 1-3	0.37	279	470	141	109	23.0
VM 1-4	0.37	297	488	141	109	23.0
VM 1-5	0.55	315	506	141	109	24.0
VM 1-6	0.55	333	524	141	109	25.0
VM 1-7	0.75	357	588	141	109	27.0
VM 1-8	0.75	375	606	141	109	27.0
VM 1-9	0.75	393	624	141	109	28.0
VM 1-10	1.1	411	642	141	109	30.0
VM 1-11	1.1	429	660	141	109	31.0
VM 1-12	1.1	447	678	141	109	31.0
VM 1-13	1.1	465	696	141	109	31.0
VM 1-15	1.5	517	792	175	140	39.1
VM 1-17	1.5	553	828	175	140	39.9
VM 1-19	2.2	589	864	175	140	42.7
VM 1-21	2.2	625	900	175	140	43.4
VM 1-23	2.2	661	936	175	140	44.2
VM 1-25	2.2	697	972	175	140	44.9
VM 1-27	3	737	1057	196	178	52.4

Dimensional sketch VMC1 / VMN1

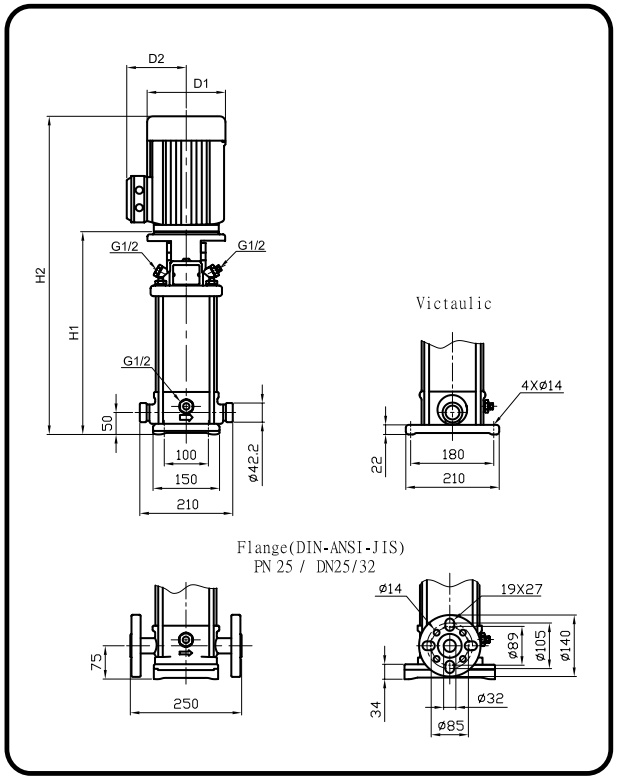

Dimensions and Weight VMC1 / VMN1

Model	Motor P_2 [kW]	Dimension [mm]						Net weight [kg]	
		Victaulic		DIN flange		D1	D2	Victaulic	DIN flange
		H1	H2	H1	H2				
VMC / VMN 1-2	0.37	257	448	282	473	141	109	16	20
VMC / VMN 1-3	0.37	257	448	282	473	141	109	16	21
VMC / VMN 1-4	0.37	275	466	300	491	141	109	17	21
VMC / VMN 1-5	0.55	293	484	318	509	141	109	18	22
VMC / VMN 1-6	0.55	311	502	336	527	141	109	18	22
VMC / VMN 1-7	0.75	335	566	360	591	141	109	21	25
VMC / VMN 1-8	0.75	353	584	378	609	141	109	21	26
VMC / VMN 1-9	0.75	371	602	396	627	141	109	22	26
VMC / VMN 1-10	1.1	389	620	414	645	141	109	24	28
VMC / VMN 1-11	1.1	407	638	432	663	141	109	25	29
VMC / VMN 1-12	1.1	425	656	450	681	141	109	25	29
VMC / VMN 1-13	1.1	443	674	468	699	141	109	26	30
VMC / VMN 1-15	1.5	495	770	520	795	175	140	33.8	37.3
VMC / VMN 1-17	1.5	531	806	556	831	175	140	34.5	38.1
VMC / VMN 1-19	2.2	567	842	592	867	175	140	37.3	40.8
VMC / VMN 1-21	2.2	603	878	628	903	175	140	38	41.6
VMC / VMN 1-23	2.2	639	914	664	939	175	140	38.8	42.3
VMC / VMN 1-25	2.2	675	950	700	975	175	140	39.5	43.1
VMC / VMN 1-27	3	716	1036	741	1034	196	148	46.7	50.3

VM3 / VMC3 / VMN3

Performance Curves

The perfomance curve applies to the VM, VMC and VMN version of the pump.

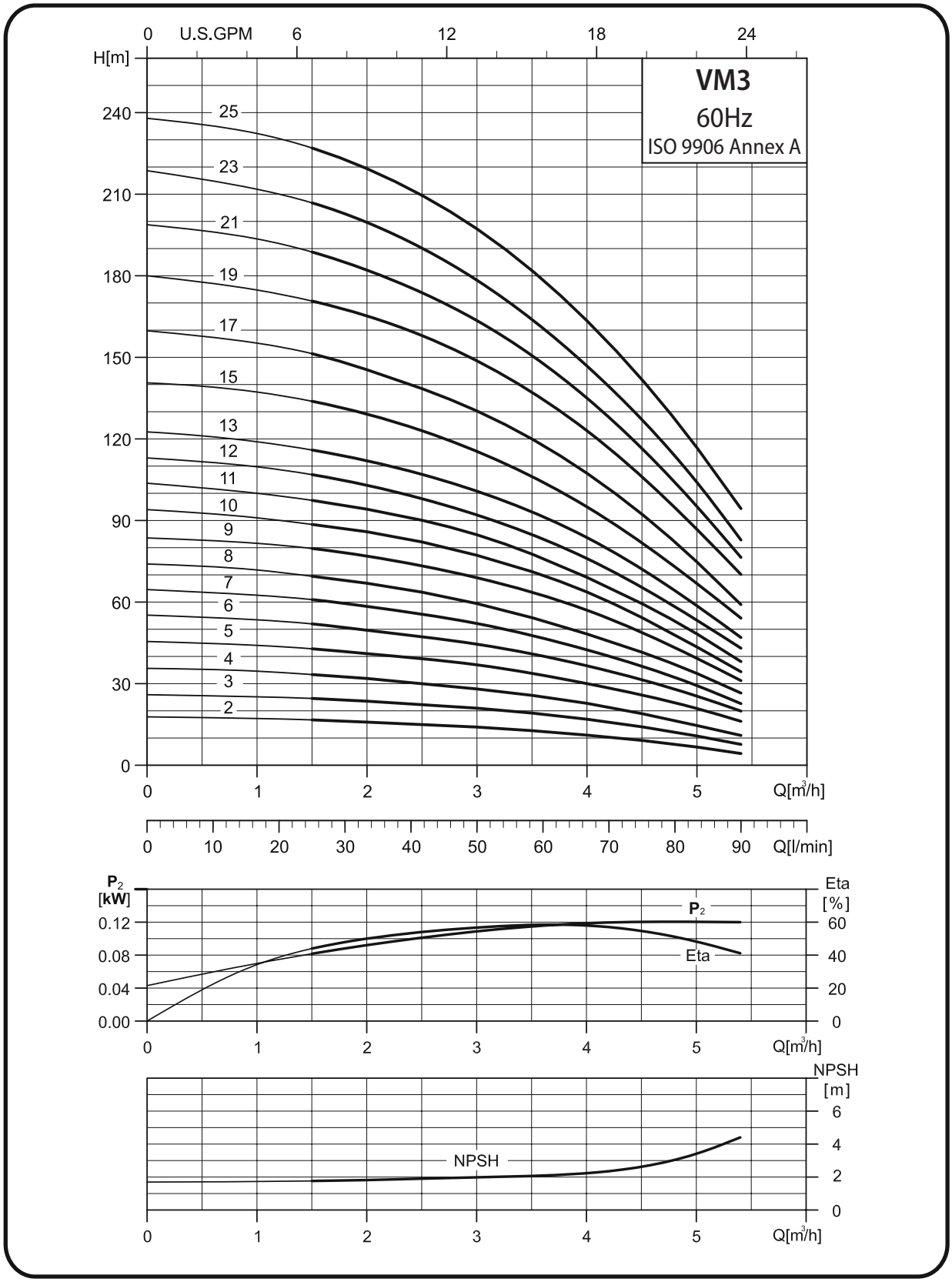

Dimensional sketch - VM3

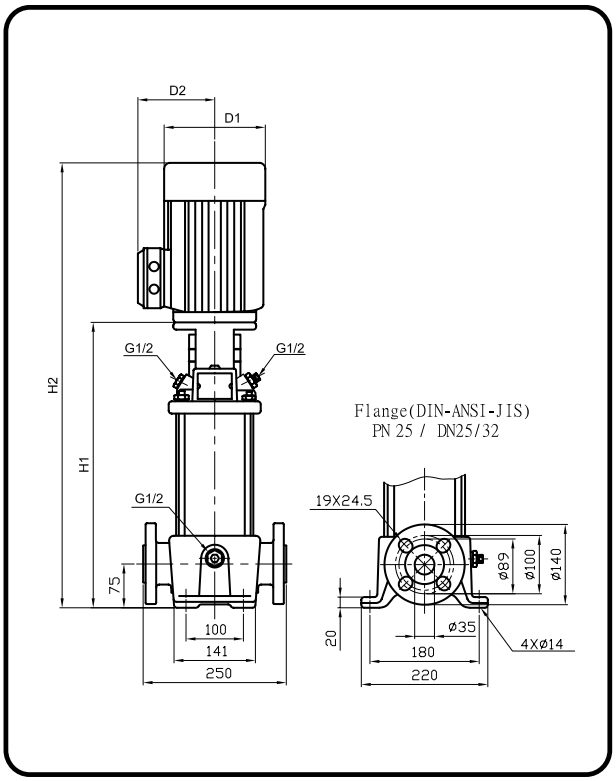

Dimensions and Weight - VM3

Model	Motor P_2 [kW]	Dimension [mm]				Net weight [kg]
		H1	H2	D1	D2	
VM 3-2	0.37	279	470	141	109	23
VM 3-3	0.55	279	470	141	109	24
VM 3-4	0.55	297	488	141	109	24
VM 3-5	0.75	321	552	141	109	26
VM 3-6	1.1	339	570	141	109	29
VM 3-7	1.1	357	588	141	109	29
VM 3-8	1.1	375	606	141	109	29
VM 3-9	1.5	409	684	175	140	36.9
VM 3-10	1.5	427	702	175	140	37.3
VM 3-11	1.5	445	720	175	140	37.6
VM 3-12	2.2	463	738	175	140	40.0
VM 3-13	2.2	517	792	175	140	40.4
VM 3-15	2.2	553	828	175	140	41.1
VM 3-17	2.2	593	868	175	140	41.9
VM 3-19	3	629	949	196	148	49.4
VM 3-21	3	665	985	196	148	50.2
VM 3-23	3	665	985	196	148	50.9
VM 3-25	4	701	1036	219	162	58.7

Dimensional sketch VMC3 / VMN3

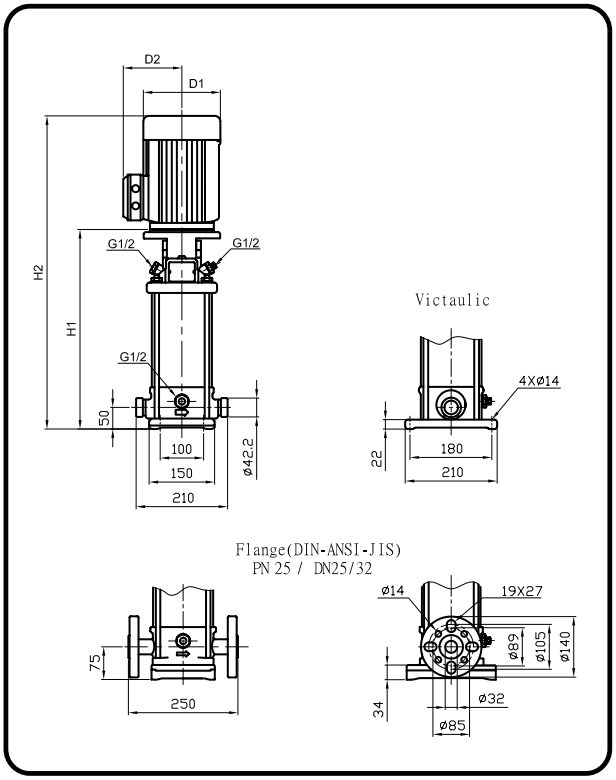

Dimensions and Weight VMC3 / VMN3

Model	Motor P_2 [kW]	Dimension [mm]						Net weight [kg]	
		Victaulic		DIN flange		D1	D2	Victaulic	DIN flange
		H1	H2	H1	H2				
VMC / VMN 3-2	0.37	257	448	282	473	141	109	16	20
VMC / VMN 3-3	0.55	257	448	282	473	141	109	17	21
VMC / VMN 3-4	0.55	275	466	300	491	141	109	17	22
VMC / VMN 3-5	0.75	299	530	324	555	141	109	20	24
VMC / VMN 3-6	1.1	317	548	342	573	141	109	23	27
VMC / VMN 3-7	1.1	335	566	360	591	141	109	23	27
VMC / VMN 3-8	1.1	353	584	378	609	141	109	24	28
VMC / VMN 3-9	1.5	387	662	412	687	175	140	31.2	35.1
VMC / VMN 3-10	1.5	405	680	430	705	175	140	31.6	35.5
VMC / VMN 3-11	1.5	423	698	448	723	175	140	31.9	35.9
VMC / VMN 3-12	2.2	441	716	466	741	175	140	34.3	38.2
VMC / VMN 3-13	2.2	459	734	484	759	175	140	34.7	38.6
VMC / VMN 3-15	2.2	495	770	520	795	175	140	35.5	39.4
VMC / VMN 3-17	2.2	531	806	556	831	175	140	36.5	40.1
VMC / VMN 3-19	3	572	892	597	917	196	148	43.3	46.8
VMC / VMN 3-21	3	608	928	633	953	196	148	44.0	47.5
VMC / VMN 3-23	3	644	964	669	989	196	148	44.8	48.3
VMC / VMN 3-25	4	680	1015	705	1040	219	162	52.5	56.1

VM5 / VMC5 / VMN5

Performance Curves

The perfomance curve applies to the VM, VMC and VMN version of the pump.

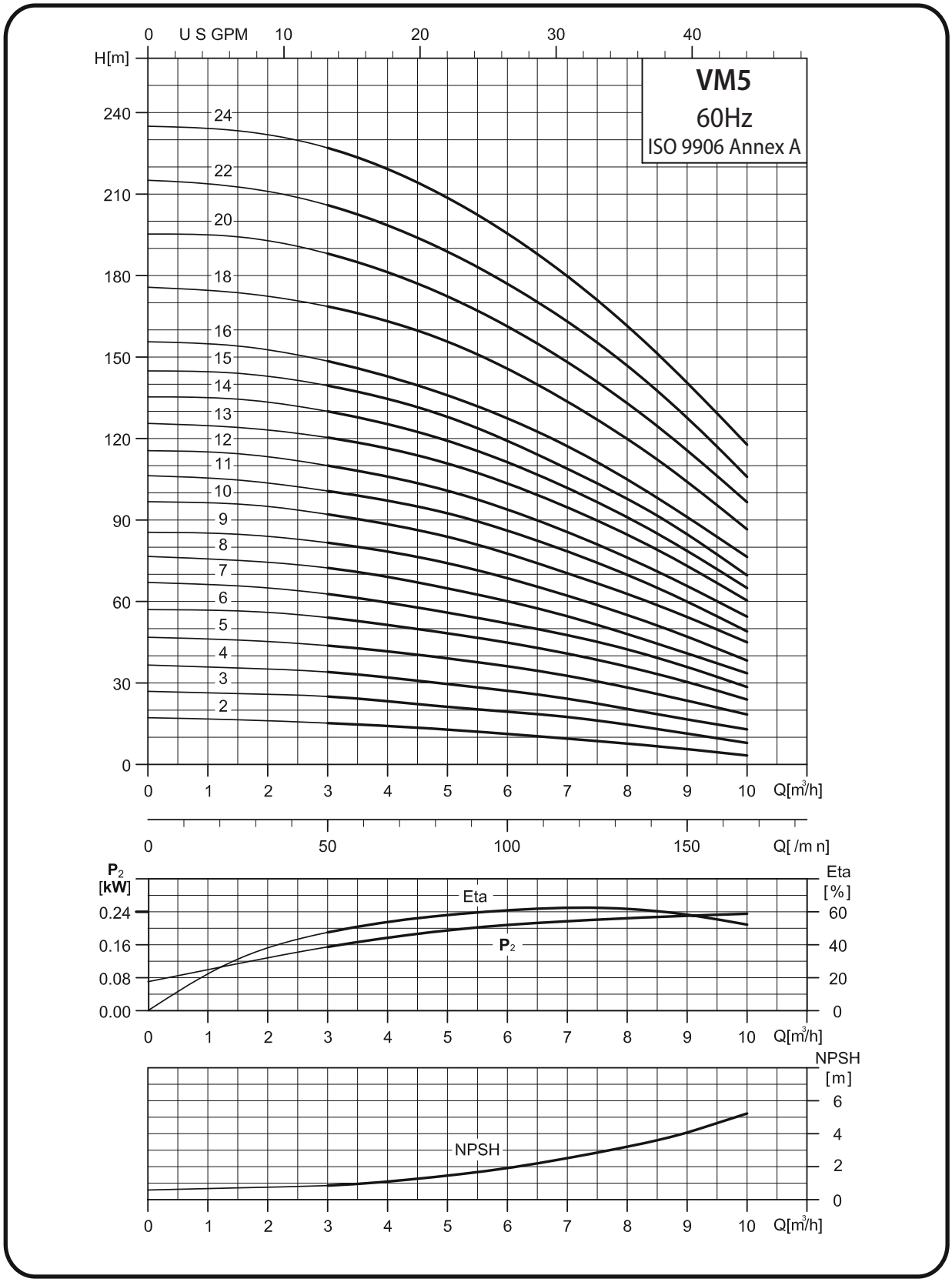

Dimensional sketch - VM5

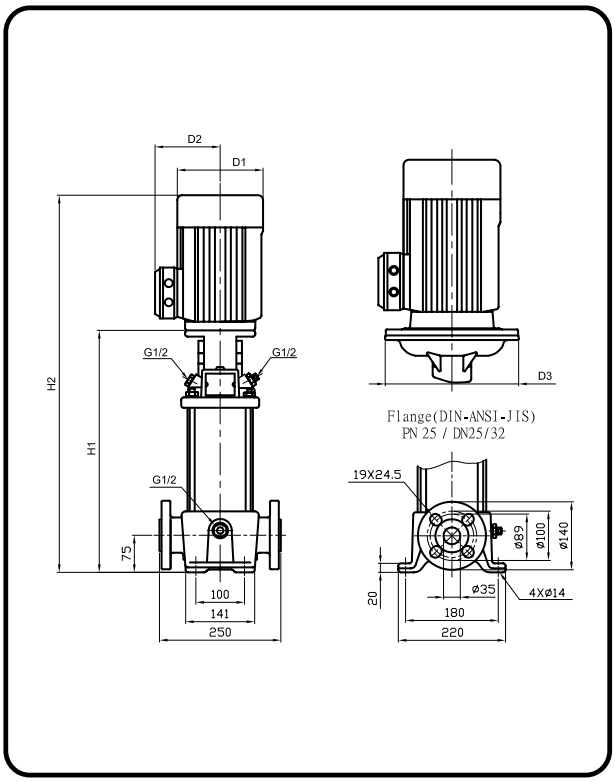

Dimensions and Weight - VM5

Model	Motor P_2 [kW]	Dimension [mm]					Net weight [kg]
		H1	H2	D1	D2	D3	
VM 5-2	0.55	279	470	141	109	--	23
VM 5-3	1.1	312	543	141	109	--	28
VM 5-4	1.1	339	570	141	109	--	28
VM 5-5	1.5	382	657	175	140	--	36.1
VM 5-6	2.2	409	684	175	140	--	38.7
VM 5-7	2.2	436	711	175	140	--	39.2
VM 5-8	2.2	463	738	175	140	--	39.8
VM 5-9	2.2	490	765	175	140	--	40.3
VM 5-10	3	521	841	196	148	--	47.6
VM 5-11	3	548	868	196	148	--	48.2
VM 5-12	3	575	895	196	148	--	48.8
VM 5-13	4	602	937	219	162	--	56.4
VM 5-14	4	629	964	219	162	--	56.9
VM 5-15	4	656	991	219	162	--	57.5
VM 5-16	4	683	1018	219	162	--	58.1
VM 5-18	5.5	767	1127	234	199	300	77.9
VM 5-20	5.5	821	1181	234	199	300	79.1
VM 5-22	5.5	875	1235	234	199	300	80.2
VM 5-24	7.5	929	1329	234	199	300	90.2

Dimensional sketch VMC5 / VMN5

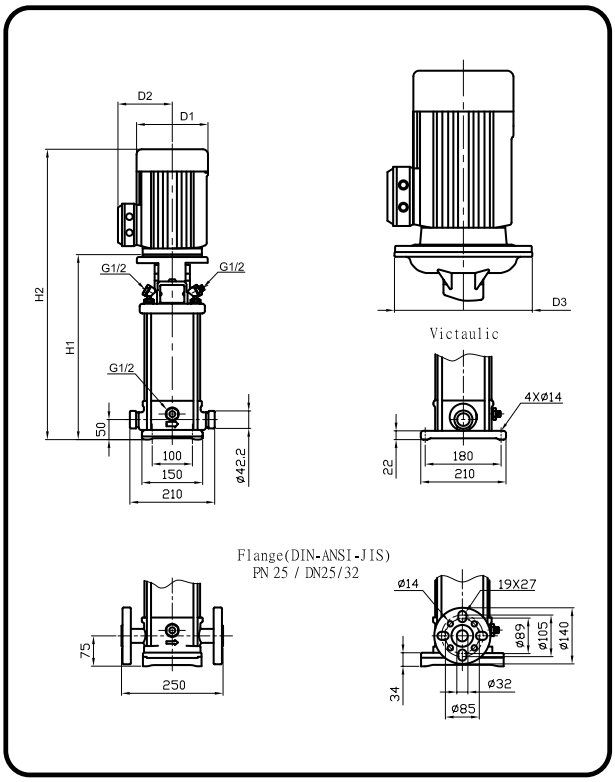

Dimensions and Weight VMC5 / VMN5

Model	Motor P_2 [kW]	Dimension [mm]							Net weight [kg]	
		Victaulic		DIN flange		D1	D2	D3	Victaulic	DIN flange
		H1	H2	H1	H2					
VMC / VMN 5-2	0.55	257	448	282	473	141	109	—	17	21
VMC / VMN 5-3	1.1	290	521	315	546	141	109	—	22	26
VMC / VMN 5-4	1.1	317	548	342	573	141	109	—	23	27
VMC / VMN 5-5	1.5	360	635	385	660	175	140	—	30.8	34.3
VMC / VMN 5-6	2.2	387	662	412	687	175	140	—	33.3	36.8
VMC / VMN 5-7	2.2	414	689	439	714	175	140	—	33.8	37.3
VMC / VMN 5-8	2.2	441	716	466	741	175	140	—	34.4	37.9
VMC / VMN 5-9	2.2	468	743	493	768	175	140	—	34.9	38.5
VMC / VMN 5-10	3	500	870	525	845	196	148	—	42.0	45.5
VMC / VMN 5-11	3	527	847	552	872	196	148	—	42.5	46.1
VMC / VMN 5-12	3	554	874	579	899	196	148	—	43.1	46.6
VMC / VMN 5-13	4	581	916	606	941	219	162	—	50.7	54.2
VMC / VMN 5-14	4	608	943	633	968	219	162	—	51.2	54.8
VMC / VMN 5-15	4	635	970	660	995	219	162	—	51.8	55.4
VMC / VMN 5-16	4	662	997	687	1022	219	162	—	52.4	55.9
VMC / VMN 5-18	5.5	745	1105	770	1130	234	199	300	72.2	75.7
VMC / VMN 5-20	5.5	799	1159	824	1184	234	199	300	73.3	76.9
VMC / VMN 5-22	5.5	853	1213	878	1238	234	199	300	74.5	78.0
VMC / VMN 5-24	7.5	907	1307	932	1332	234	199	300	84.6	88.2

VM10 / VMC10 / VMN10

Performance Curves

The perfomance curve applies to the VM, VMC and VMN version of the pump.

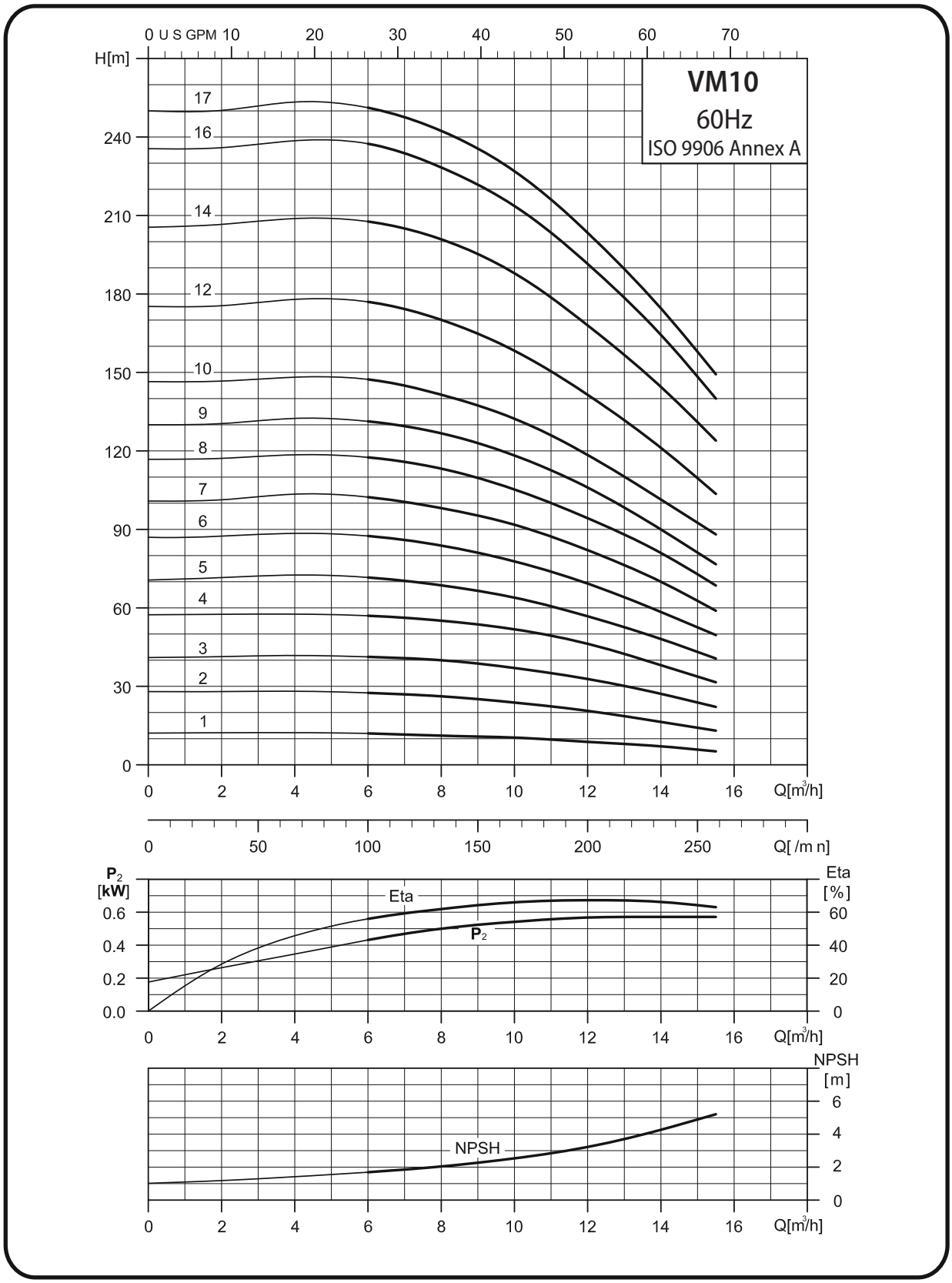

Dimensional sketch - VM10

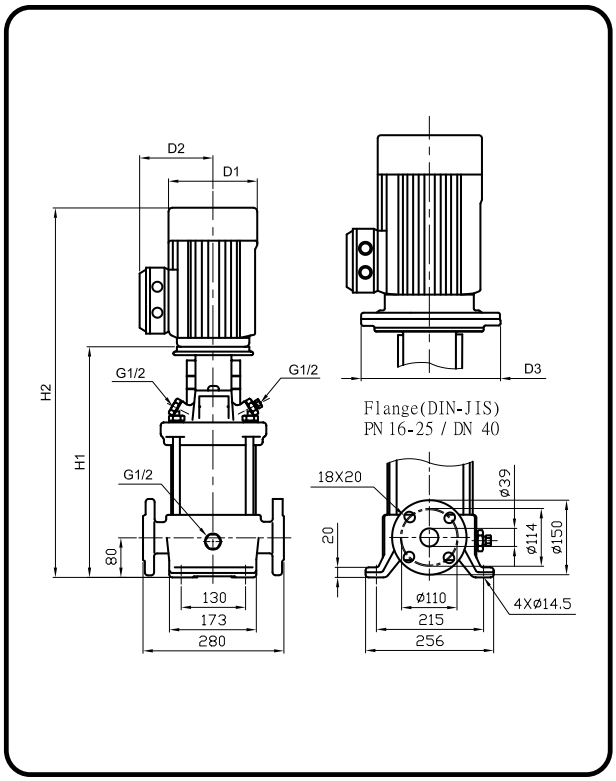

Dimensions and Weight - VM10

Model	Motor P_2 [kW]	Dimension [mm]					Net weight [kg]
		H1	H2	D1	D2	D3	
VM 10-1	0.75	347	578	141	109	--	36
VM 10-2	1.5	363	638	175	140	--	46.2
VM 10-3	2.2	393	668	175	140	--	49.2
VM 10-4	3	428	748	196	148	--	57.5
VM 10-5	3	458	778	196	148	--	58.6
VM 10-6	4	488	823	219	162	--	66.6
VM 10-7	5.5	550	910	234	199	300	91.6
VM 10-8	5.5	580	940	234	199	300	92.6
VM 10-9	5.5	610	970	234	199	300	93.6
VM 10-10	7.5	640	1040	234	199	300	103.6
VM 10-12	7.5	700	1100	234	199	300	105.6
VM 10-14	11	837	1282	268	215	300	137.3
VM 10-16	11	897	1342	268	215	300	139.3
VM 10-17	11	957	1402	268	215	300	140.3

Dimensional sketch VMC10 / VMN10

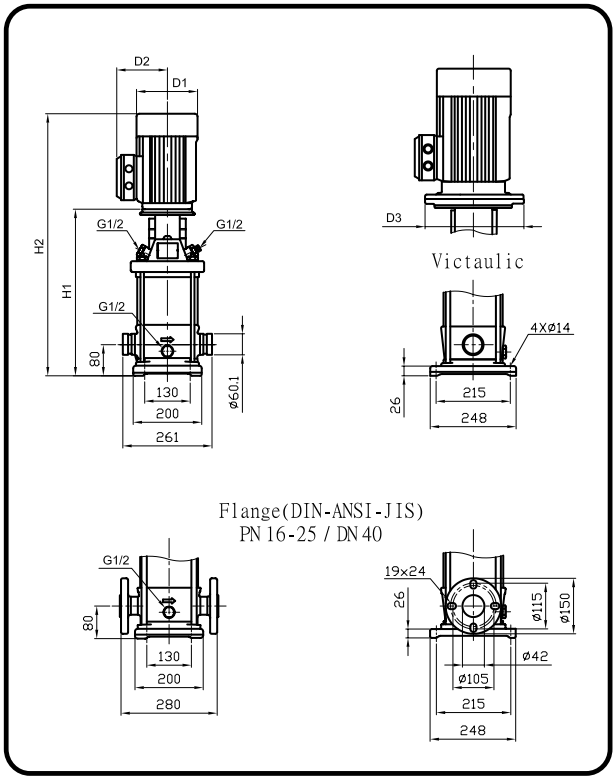

Dimensions and Weight VMC10 / VMN10

Model	Motor P_2 [kW]	Dimension [mm]							Net weight [kg]	
		Victaulic		DIN flange		D1	D2	D3	Victaulic	DIN flange
		H1	H2	H1	H2					
VMC / VMN 10-1	0.75	357	588	357	588	141	109	—	31	34
VMC / VMN 10-2	1.5	373	648	373	648	175	140	—	41.6	45.1
VMC / VMN 10-3	2.2	403	678	403	678	175	140	—	44.6	48.1
VMC / VMN 10-4	3	438	758	438	758	196	148	—	51.4	54.9
VMC / VMN 10-5	3	468	788	468	788	196	148	—	52.4	55.9
VMC / VMN 10-6	4	498	833	498	833	219	162	—	60.4	63.9
VMC / VMN 10-7	5.5	560	920	560	920	234	199	300	86.3	89.8
VMC / VMN 10-8	5.5	590	950	590	950	234	199	300	87.3	90.8
VMC / VMN 10-9	5.5	620	980	620	980	234	199	300	88.3	91.9
VMC / VMN 10-10	7.5	650	1050	650	1050	234	199	300	98.3	101.9
VMC / VMN 10-12	7.5	710	1110	710	1110	234	199	300	100.4	103.9
VMC / VMN 10-14	11	847	1292	847	1292	268	215	350	132.7	136.2
VMC / VMN 10-16	11	907	1352	907	1352	268	215	350	134.7	138.2
VMC / VMN 10-17	11	967	1412	967	1412	268	215	350	135.7	139.2

VM15 / VMC15 / VMN15

Performance Curves

The perfomance curve applies to the VM, VMC and VMN version of the pump.

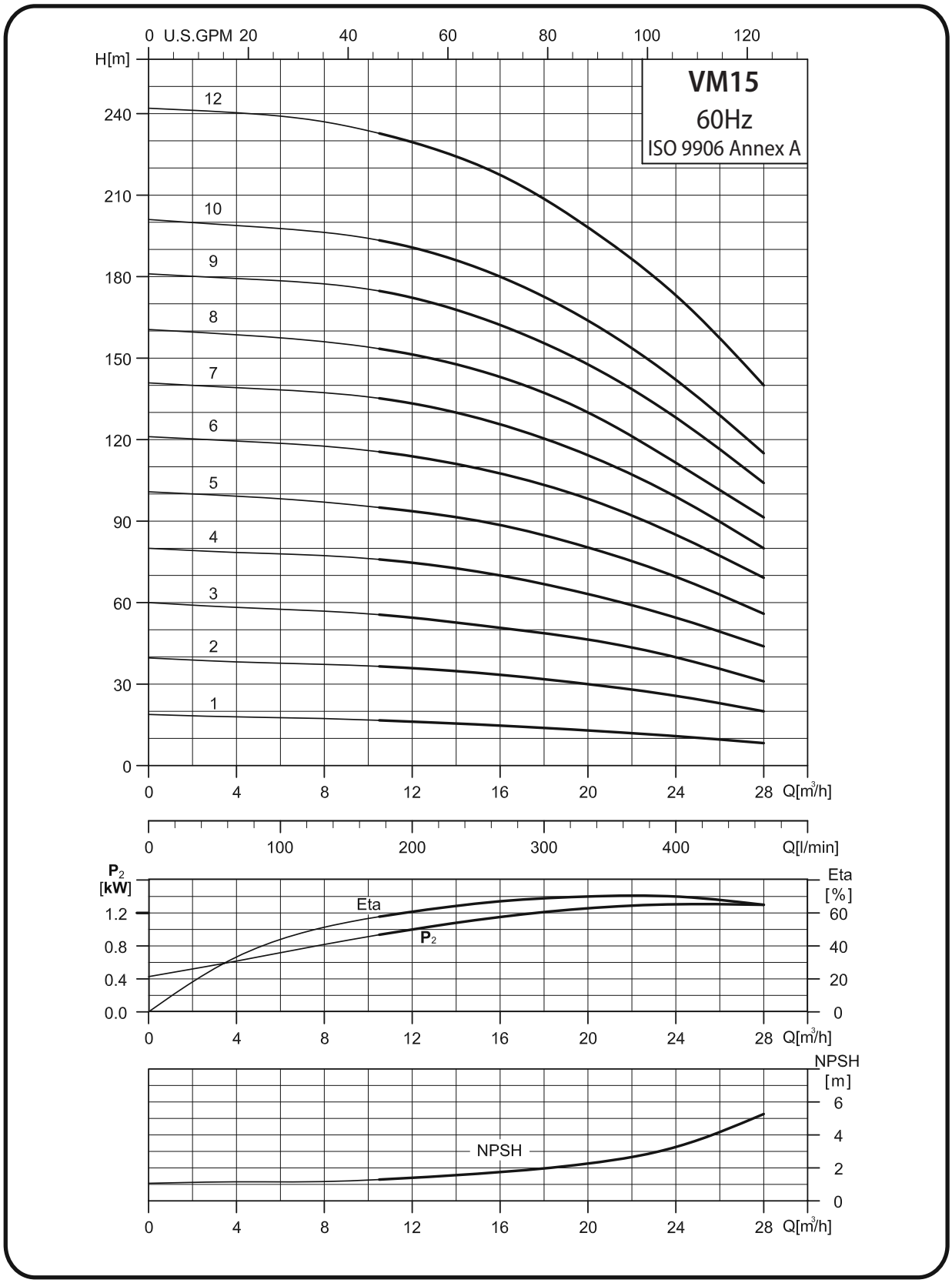

Dimensional sketch - VM15

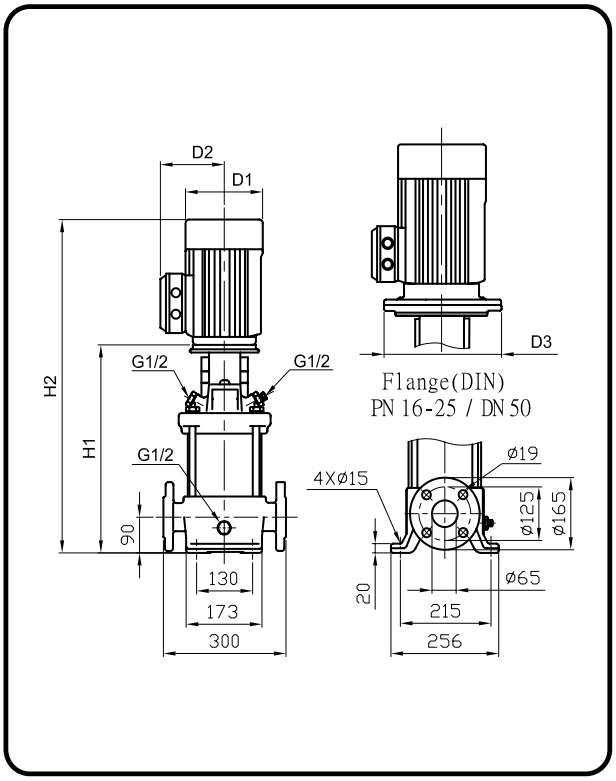

Dimensions and Weight - VM15

Model	Motor P_2 [kW]	Dimension [mm]					Net weight [kg]
		H1	H2	D1	D2	D3	
VM 15-1	1.5	415	690	175	140	--	49.8
VM 15-2	3	450	770	196	148	--	59.9
VM 15-3	4	465	800	219	162	--	68.3
VM 15-4	5.5	542	902	234	199	300	93.7
VM 15-5	7.5	587	987	234	199	300	104.1
VM 15-6	11	709	1154	268	215	350	135.2
VM 15-7	11	754	1199	268	215	350	136.5
VM 15-8	11	799	1244	268	215	350	137.9
VM 15-9	15	844	1333	268	215	350	150.3
VM 15-10	15	889	1378	268	215	350	151.7
VM 15-12	18.5	979	1514	317	242	350	189.5

Dimensional sketch VMC15 / VMN15

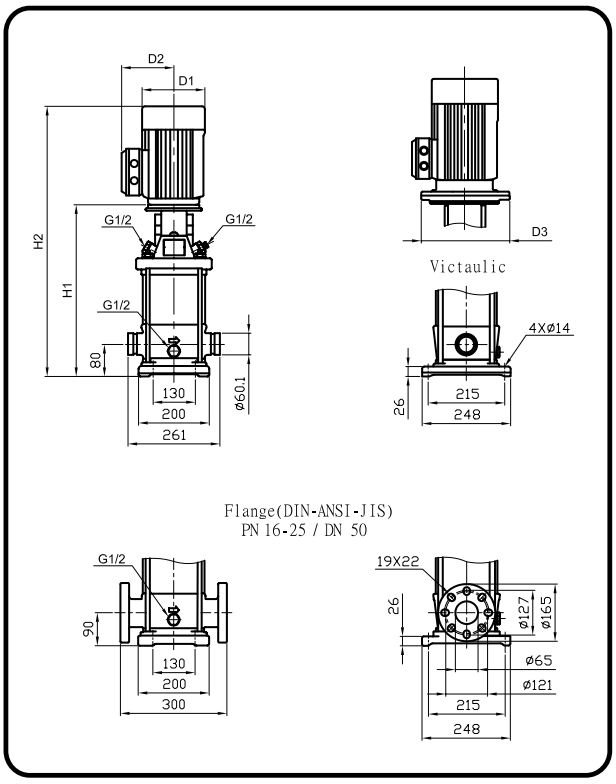

Dimensions and Weight VMC15 / VMN15

Model	Motor P_2 [kW]	Dimension [mm]							Net weight [kg]	
		Victaulic		DIN flange		D1	D2	D3	Victaulic	DIN flange
		H1	H2	H1	H2					
VMC / VMN 15-1	1.5	403	678	413	688	175	140	—	41.5	46.0
VMC / VMN 15-2	3	408	728	418	738	196	148	—	50.1	54.6
VMC / VMN 15-3	4	453	788	463	798	219	162	—	58.5	63.0
VMC / VMN 15-4	5.5	530	890	540	900	234	199	300	84.8	89.3
VMC / VMN 15-5	7.5	575	975	585	985	234	199	300	95.2	99.7
VMC / VMN 15-6	11	697	1142	707	1152	268	215	350	126.8	131.3
VMC / VMN 15-7	11	742	1187	752	1197	268	215	350	128.2	132.7
VMC / VMN 15-8	11	787	1232	797	1242	268	215	350	129.6	134.1
VMC / VMN 15-9	15	832	1321	842	1331	268	215	350	142.0	146.5
VMC / VMN 15-10	15	877	1366	887	1376	268	215	350	143.4	147.9
VMC / VMN 15-12	18.5	967	1502	977	1512	317	242	350	181.2	185.7

VM20 / VMC20 / VMN20

Performance Curves

The perfomance curve applies to the VM, VMC and VMN version of the pump.

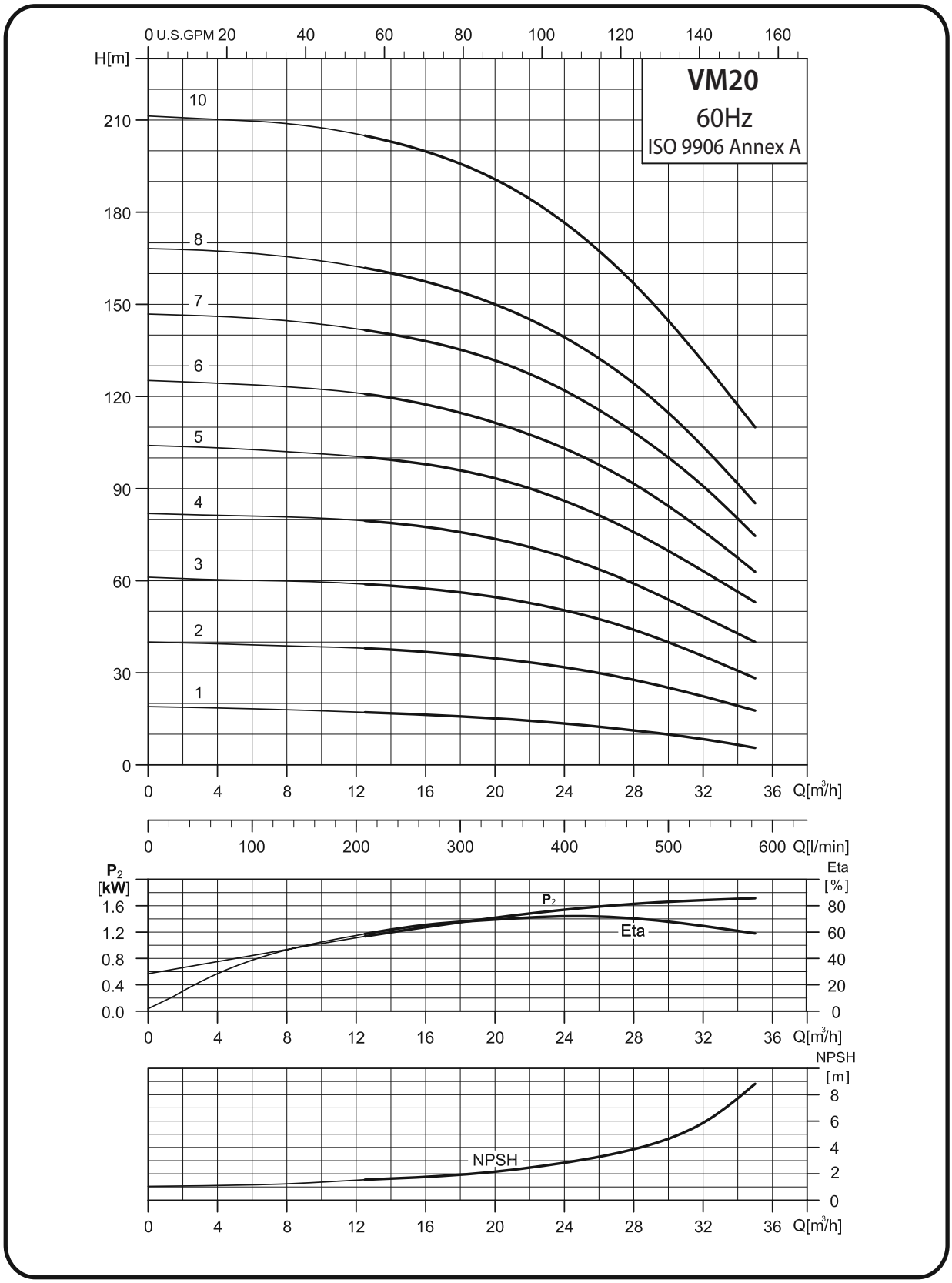

Dimensional sketch - VM20

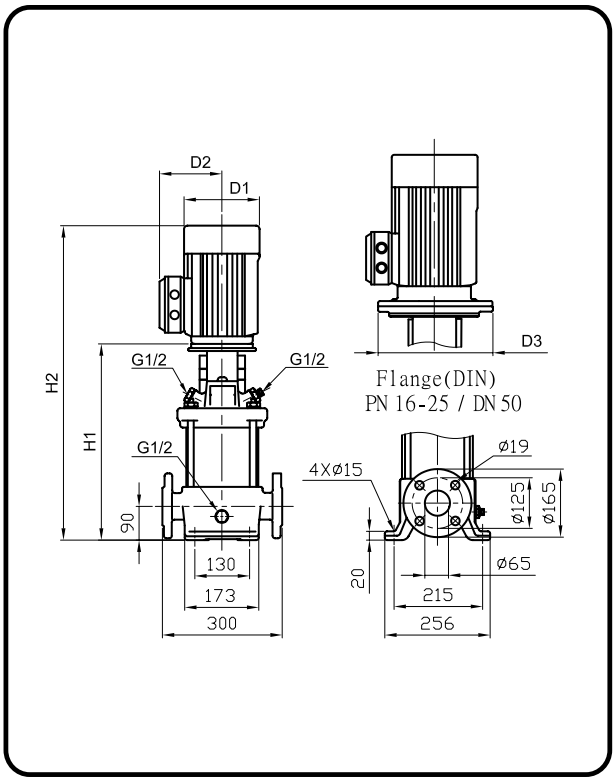

Dimensions and Weight - VM20

Model	Motor P_2 [kW]	Dimension [mm]					Net weight [kg]
		H1	H2	D1	D2	D3	
VM 20-1	2.2	415	690	175	140	--	51.9
VM 20-2	4	420	755	219	162	--	67
VM 20-3	5.5	497	857	234	199	300	92.4
VM 20-4	7.5	542	942	234	199	300	102.8
VM 20-5	11	664	1109	268	215	350	133.3
VM 20-6	11	709	1154	268	215	350	134.7
VM 20-7	15	754	1243	268	215	350	147.6
VM 20-8	15	799	1288	268	215	350	149
VM 20-10	18.5	889	1424	317	242	350	186.8

Dimensional sketch VMC20 / VMN20

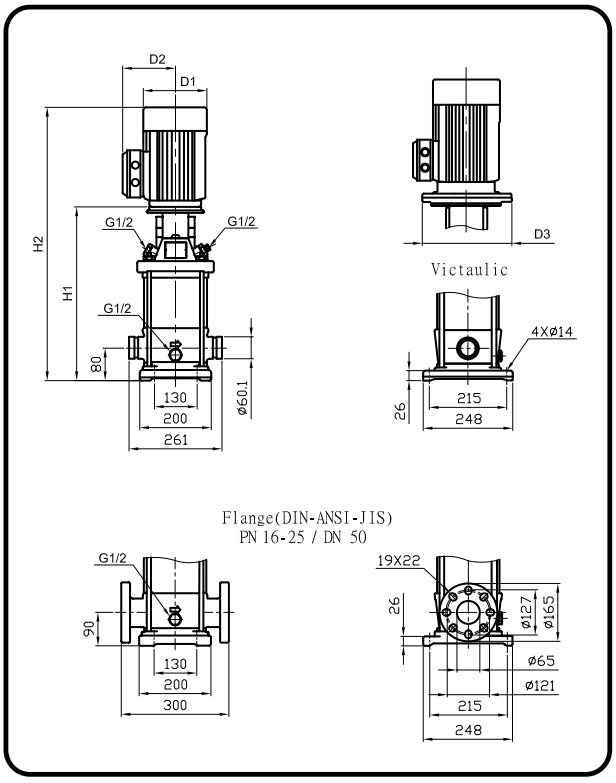

Dimensions and Weight VMC20 / VMN20

Model	Motor P_2 [kW]	Dimension [mm]							Net weight [kg]	
		Victaulic		DIN flange		D1	D2	D3	Victaulic	DIN flange
		H1	H2	H1	H2					
VMC / VMN 20-1	2.2	405	680	415	690	175	140	—	43.5	48.0
VMC / VMN 20-2	4	410	745	420	755	219	162	—	57.1	61.6
VMC / VMN 20-3	5.5	487	847	497	857	234	199	300	83.4	87.9
VMC / VMN 20-4	7.5	532	932	542	942	234	199	300	93.8	98.3
VMC / VMN 20-5	11	654	1099	664	1109	268	215	350	125.4	129.9
VMC / VMN 20-6	11	699	1144	709	1154	268	215	350	126.8	131.3
VMC / VMN 20-7	15	744	1233	754	1243	268	215	350	139.2	143.7
VMC / VMN 20-8	15	789	1278	799	1288	268	215	350	140.6	145.1
VMC / VMN 20-10	18.5	879	1414	889	1424	317	242	350	178.4	182.9

VM32 / VMC32 / VMN32

Performance Curves

The perfomance curve applies to the VM, VMC and VMN version of the pump.

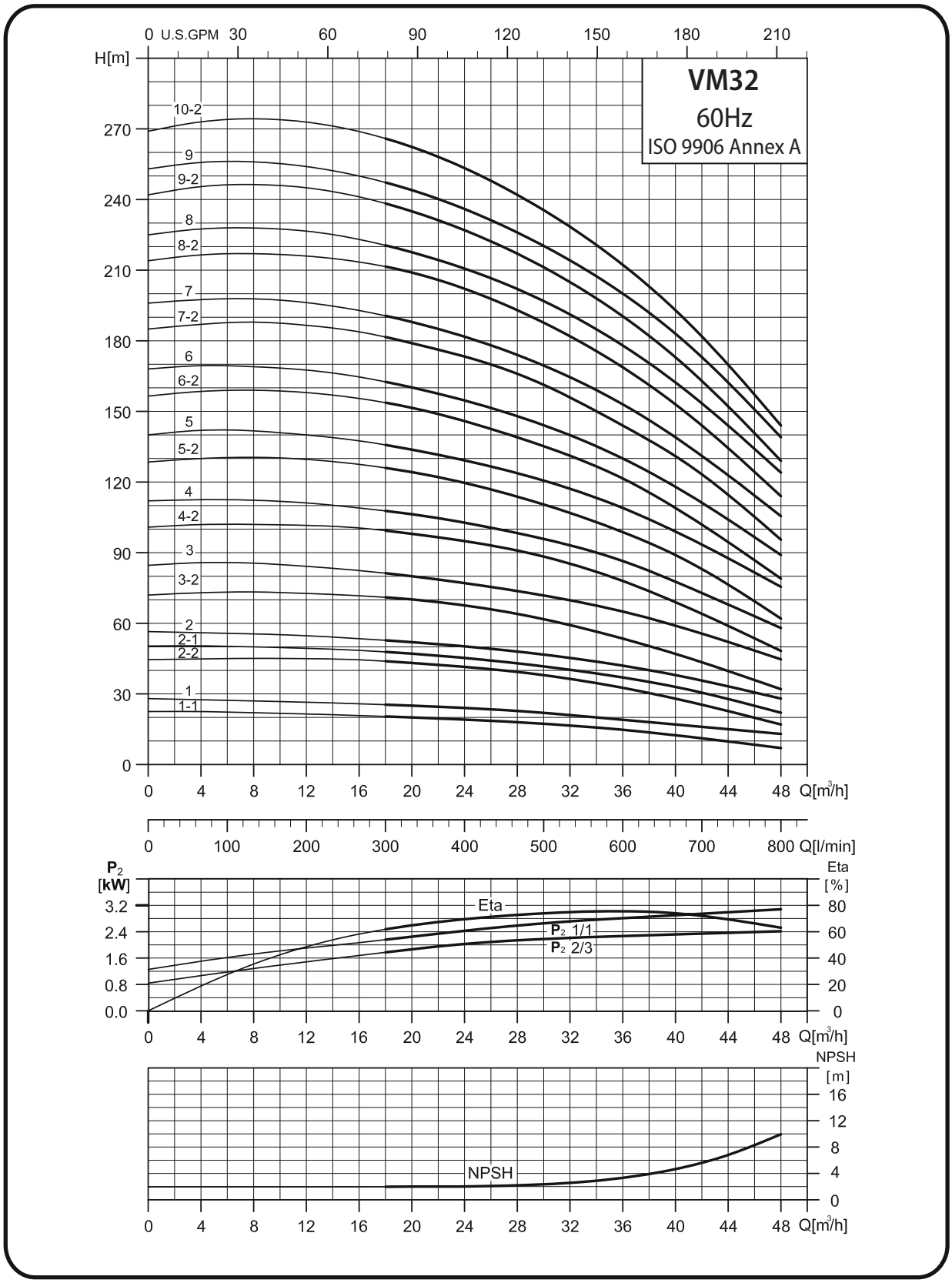

Dimensional sketch - VM32

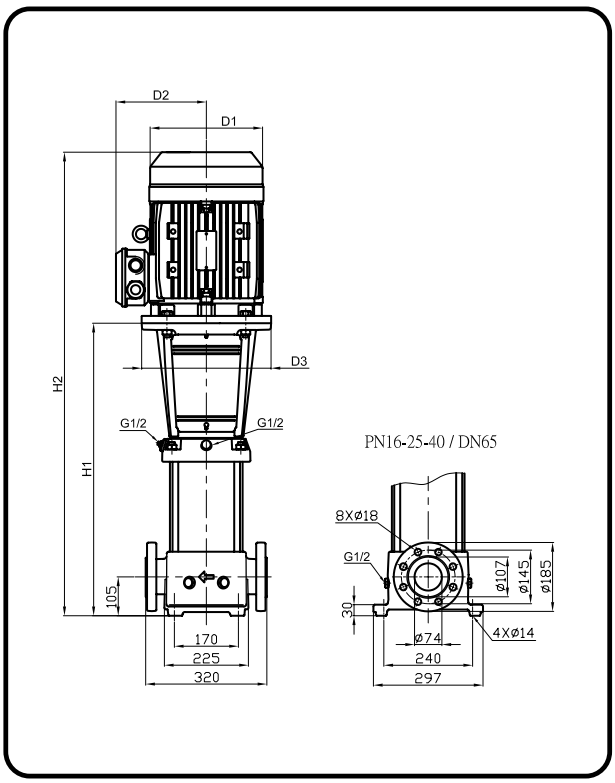

Dimensions and Weight - VM32

Model	Motor P_2 [kW]	Dimension [mm]					Net weight [kg]
		H1	H2	D1	D2	D3	
VM 32-1-1	2.2	504	779	175	140	-	71.5
VM 32-1	3.0	504	824	196	148	-	77.5
VM 32-2-2	5.5	574	934	234	199	300	101.3
VM 32-2-1	5.5	574	934	234	199	300	101.4
VM 32-2	7.5	574	974	234	199	300	110.4
VM 32-3-2	11.0	754	1199	268	215	350	146.9
VM 32-3	11.0	754	1199	268	215	350	147.0
VM 32-4-2	11.0	824	1269	268	215	350	150.0
VM 32-4	15.0	824	1313	268	215	350	161.0
VM 32-5-2	15.0	894	1383	268	215	350	164.0
VM 32-5	18.5	894	1429	317	242	350	199.0
VM 32-6-2	18.5	964	1499	317	242	350	202.0
VM 32-6	18.5	964	1499	317	242	350	202.0
VM 32-7-2	22.0	1034	1613	317	242	350	215.8
VM 32-7	22.0	1034	1613	317	242	350	215.8
VM 32-8-2	30.0	1104	1727	317	290	400	304.2
VM 32-8	30.0	1104	1727	317	290	400	304.2
VM 32-9-2	30.0	1174	1797	317	290	400	306.9
VM 32-9	30.0	1174	1797	317	290	400	306.9
VM 32-10-2	30.0	1244	1867	317	290	400	309.5

Dimensional sketch VMC32 / VMN32

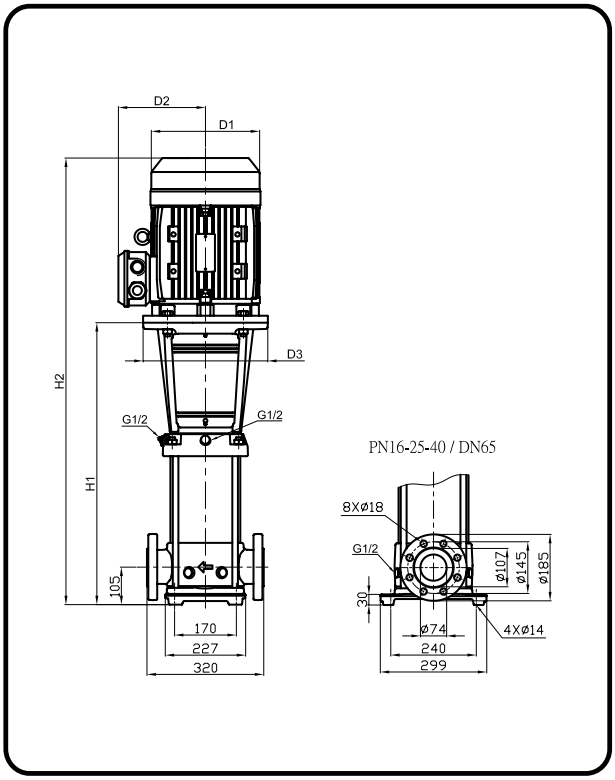

Dimensions and Weight VMC32 / VMN32

Model	Motor P_2 [kW]	Dimension [mm]					Net weight [kg]
		H1	H2	D1	D2	D3	
VMC / VMN 32-1-1	2.2	504	779	175	140	-	66.6
VMC / VMN 32-1	3.0	504	824	196	148	-	72.6
VMC / VMN 32-2-2	5.5	574	934	234	199	300	96.5
VMC / VMN 32-2-1	5.5	574	934	234	199	300	96.5
VMC / VMN 32-2	7.5	574	974	234	199	300	105.5
VMC / VMN 32-3-2	11.0	754	1199	268	215	350	142.1
VMC / VMN 32-3	11.0	754	1199	268	215	350	142.1
VMC / VMN 32-4-2	11.0	824	1269	268	215	350	145.1
VMC / VMN 32-4	15.0	824	1313	268	215	350	156.1
VMC / VMN 32-5-2	15.0	894	1383	268	215	350	159.1
VMC / VMN 32-5	18.5	894	1429	317	242	350	194.2
VMC / VMN 32-6-2	18.5	964	1499	317	242	350	197.1
VMC / VMN 32-6	18.5	964	1499	317	242	350	197.2
VMC / VMN 32-7-2	22.0	1034	1613	317	242	350	210.9
VMC / VMN 32-7	22.0	1034	1613	317	242	350	211
VMC / VMN 32-8-2	30.0	1104	1727	317	290	400	299.4
VMC / VMN 32-8	30.0	1104	1727	317	290	400	299.4
VMC / VMN 32-9-2	30.0	1174	1797	317	290	400	302
VMC / VMN 32-9	30.0	1174	1797	317	290	400	302.1
VMC / VMN 32-10-2	30.0	1244	1867	317	290	400	304.6

VM45 / VMC45 / VMN45

Performance Curves

The perfomance curve applies to the VM, VMC and VMN version of the pump.

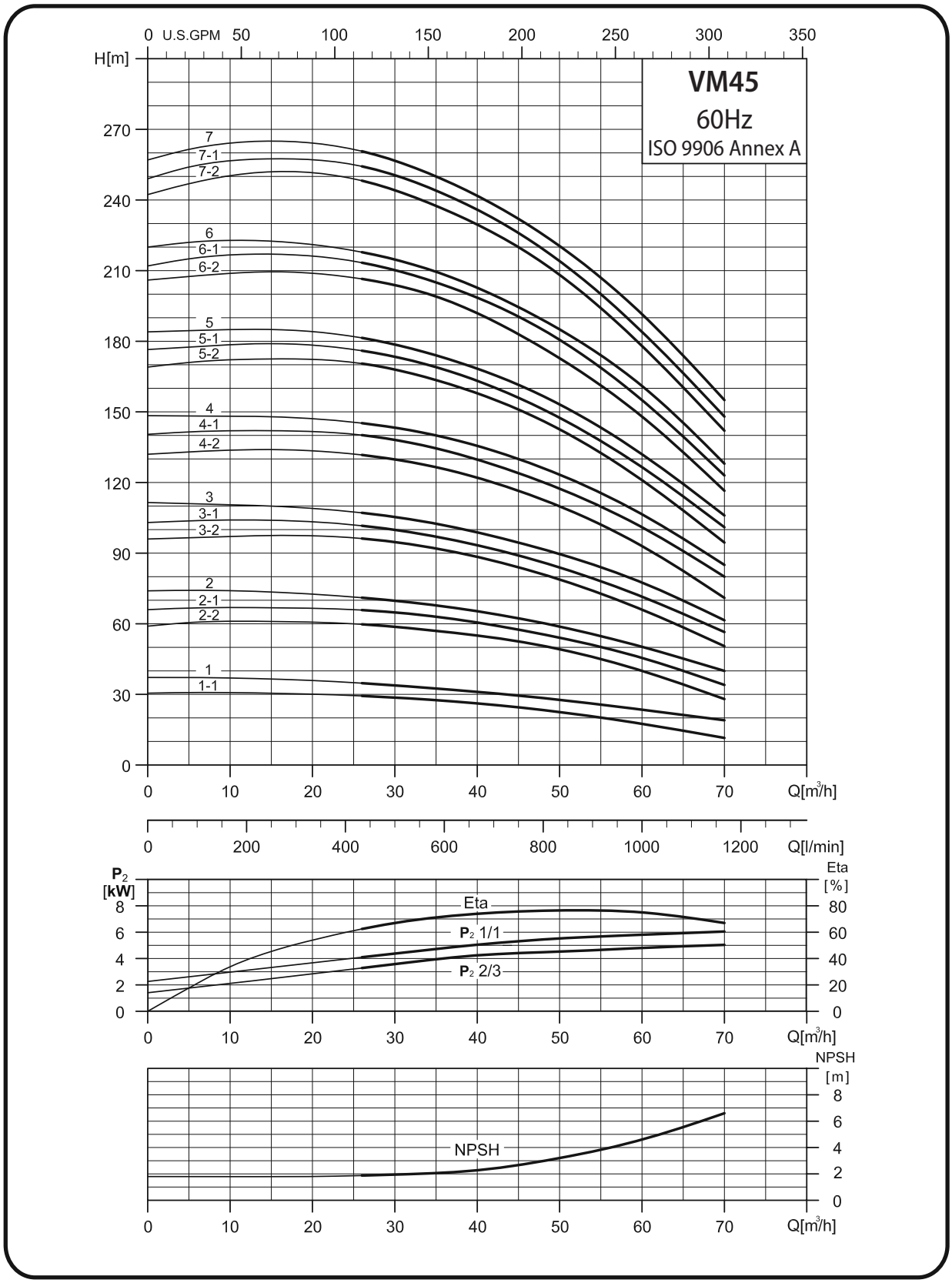

Dimensional sketch - VM45

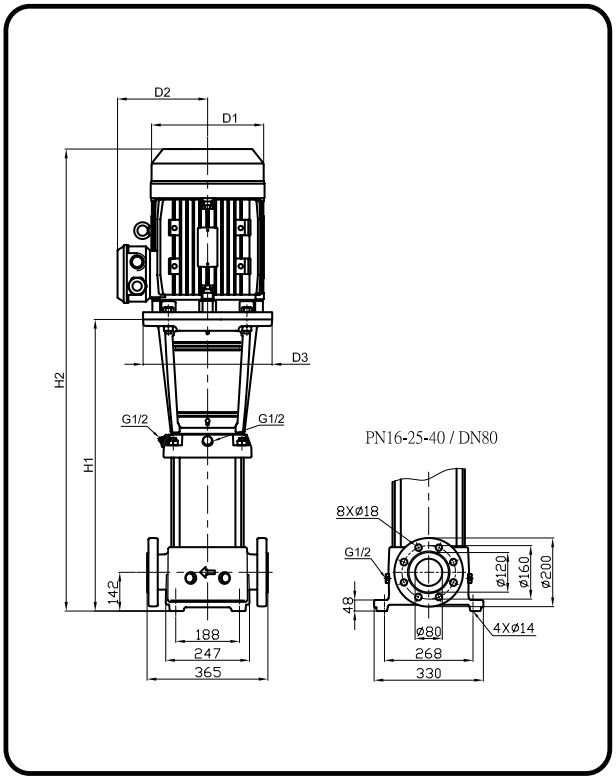

Dimensions and Weight - VM45

Model	Motor P_2 [kW]	Dimension [mm]					Net weight [kg]
		H1	H2	D1	D2	D3	
VM 45-1-1	5.5	561	921	234	199	300	108.67
VM 45-1	7.5	561	961	234	199	300	117.68
VM 45-2-2	11	751	1196	268	215	350	154.91
VM 45-2-1	11	751	1196	268	215	350	154.92
VM 45-2	15	751	1240	268	215	350	165.93
VM 45-3-2	18.5	831	1366	317	242	350	204.58
VM 45-3-1	18.5	831	1366	317	242	350	204.59
VM 45-3	18.5	831	1366	317	242	350	204.60
VM 45-4-2	22	911	1490	317	242	350	219.01
VM 45-4-1	30	911	1534	317	290	400	304.26
VM 45-4	30	911	1534	317	290	400	304.27
VM 45-5-2	30	991	1614	317	290	400	307.92
VM 45-5-1	30	991	1614	317	290	400	307.93
VM 45-5	30	991	1614	317	290	400	307.94
VM 45-6-2	37	1071	1796	398	365	400	380.59
VM 45-6-1	37	1071	1796	398	365	400	380.60
VM 45-6	37	1071	1796	398	365	400	380.61
VM 45-7-2	45	1151	1876	398	365	450	412.26
VM 45-7-1	45	1151	1876	398	365	450	412.27
VM 45-7	45	1151	1876	398	365	450	412.28

Dimensional sketch VMC45 / VMN45

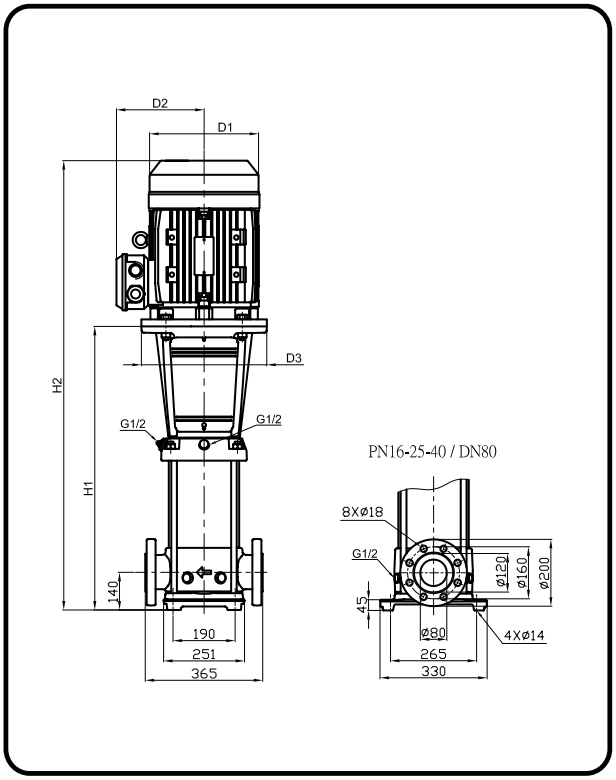

Dimensions and Weight VMC45 / VMN45

Model	Motor P_2 [kW]	Dimension [mm]					Net weight [kg]
		H1	H2	D1	D2	D3	
VMC / VMN 45-1-1	5.5	559	919	234	199	300	100.13
VMC / VMN 45-1	7.5	559	959	234	199	300	109.14
VMC / VMN 45-2-2	11	749	1194	268	215	350	146.37
VMC / VMN 45-2-1	11	749	1194	268	215	350	146.38
VMC / VMN 45-2	15	749	1238	268	215	350	157.39
VMC / VMN 45-3-2	18.5	829	1364	317	242	350	196.04
VMC / VMN 45-3-1	18.5	829	1364	317	242	350	196.05
VMC / VMN 45-3	18.5	829	1364	317	242	350	196.06
VMC / VMN 45-4-2	22	909	1488	317	242	350	210.47
VMC / VMN 45-4-1	30	909	1532	317	290	400	295.72
VMC / VMN 45-4	30	909	1532	317	290	400	295.73
VMC / VMN 45-5-2	30	989	1612	317	290	400	299.38
VMC / VMN 45-5-1	30	989	1612	317	290	400	299.39
VMC / VMN 45-5	30	989	1612	317	290	400	299.40
VMC / VMN 45-6-2	37	1069	1794	398	365	400	372.05
VMC / VMN 45-6-1	37	1069	1794	398	365	400	372.06
VMC / VMN 45-6	37	1069	1794	398	365	400	372.07
VMC / VMN 45-7-2	45	1149	1874	398	365	450	403.72
VMC / VMN 45-7-1	45	1149	1874	398	365	450	403.73
VMC / VMN 45-7	45	1149	1874	398	365	450	403.74

VM64 / VMC64 / VMN64

Performance Curves

The perfomance curve applies to the VM, VMC and VMN version of the pump.

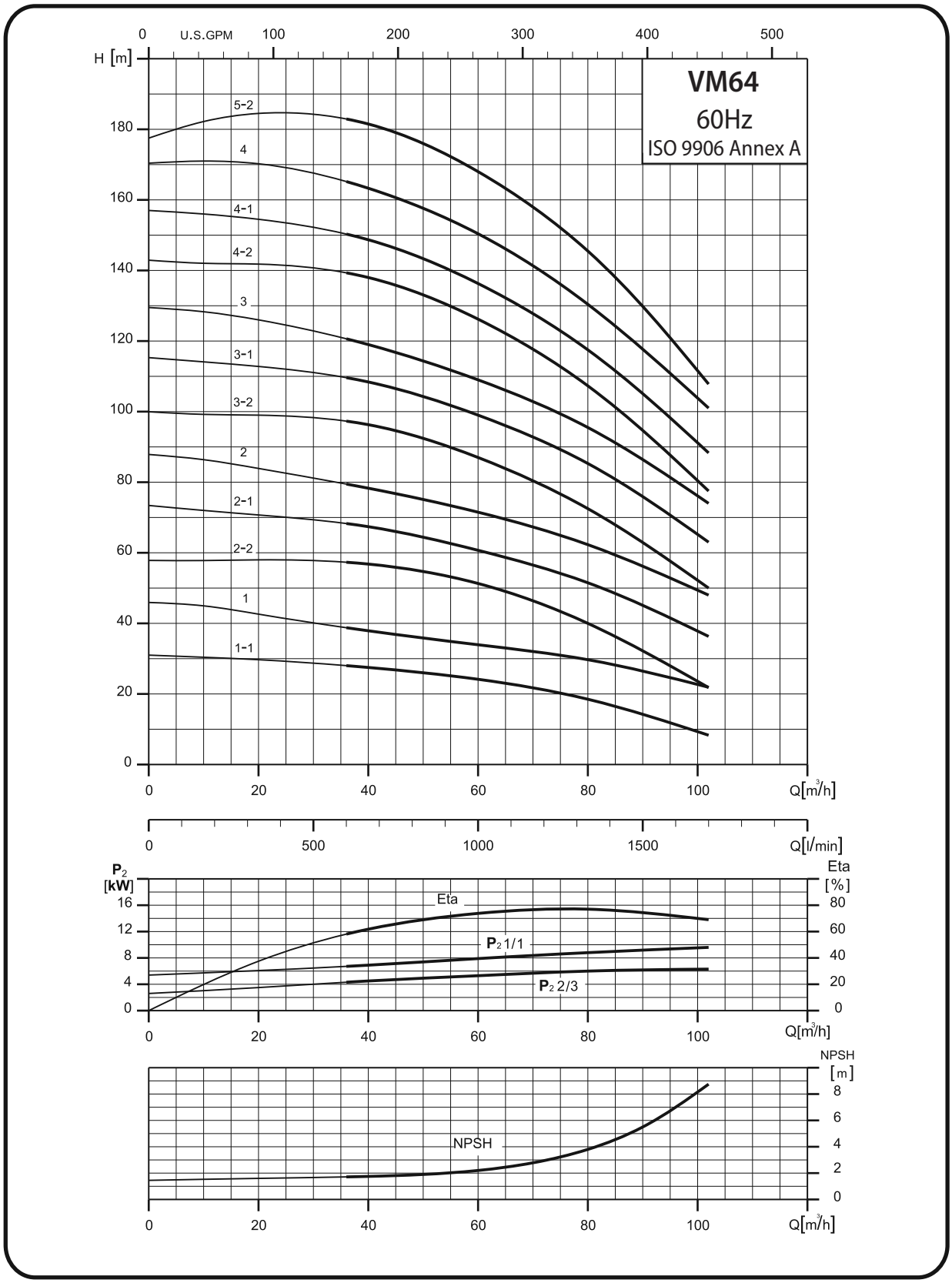

Dimensional sketch - VM64

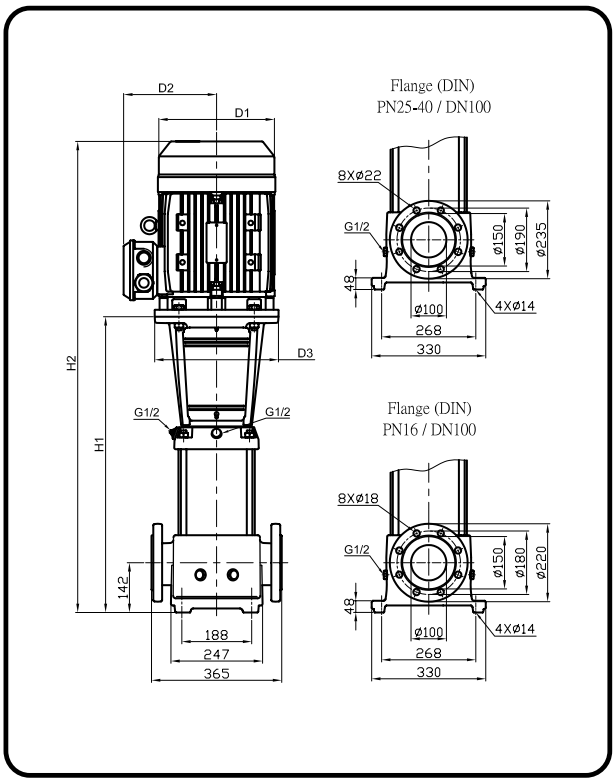

Dimensions and Weight - VM64

Model	Motor P_2 [kW]	Dimension [mm]					Net weight [kg]
		H1	H2	D1	D2	D3	
VM 64-1-1	7.5	563	963	234	199	300	111.64
VM 64-1	11.0	673	1118	268	215	350	145.22
VM 64-2-2	15.0	756	1245	268	215	350	160.16
VM 64-2-1	18.5	756	1291	317	242	350	195.16
VM 64-2	22.0	756	1335	317	242	350	205.92
VM 64-3-2	22.0	838	1417	317	242	350	210.38
VM 64-3-1	30.0	838	1461	317	290	400	295.62
VM 64-3	30.0	838	1461	317	290	400	295.62
VM 64-4-2	37.0	921	1646	398	365	400	368.52
VM 64-4-1	37.0	921	1646	398	365	400	368.52
VM 64-4	45.0	925	1650	398	365	450	396.52
VM 64-5-2	45.0	1007	1732	398	365	450	400.43

Dimensional sketch VMC64 / VMN64

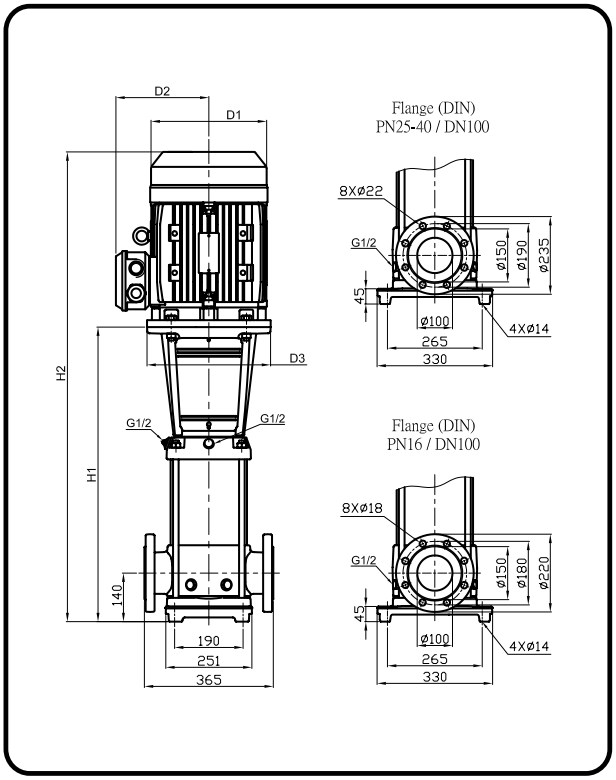

Dimensions and Weight VMC64 / VMN64

Model	Motor P_2 [kW]	Dimension [mm]					Net weight [kg]
		H1	H2	D1	D2	D3	
VMC / VMN 64-1-1	7.5	563	963	234	199	300	104.82
VMC / VMN 64-1	11.0	673	1118	268	215	350	138.40
VMC / VMN 64-2-2	15.0	756	1245	268	215	350	153.33
VMC / VMN 64-2-1	18.5	756	1291	317	242	350	188.33
VMC / VMN 64-2	22.0	756	1335	317	242	350	199.09
VMC / VMN 64-3-2	22.0	838	1417	317	242	350	203.10
VMC / VMN 64-3-1	30.0	838	1461	317	290	400	288.34
VMC / VMN 64-3	30.0	838	1461	317	290	400	288.34
VMC / VMN 64-4-2	37.0	921	1646	398	365	400	361.21
VMC / VMN 64-4-1	37.0	921	1646	398	365	400	361.21
VMC / VMN 64-4	45.0	925	1650	398	365	450	389.21
VMC / VMN 64-5-2	45.0	1007	1732	398	365	450	393.09

VM90 / VMC90 / VMN90

Performance Curves

The perfomance curve applies to the VM, VMC and VMN version of the pump.

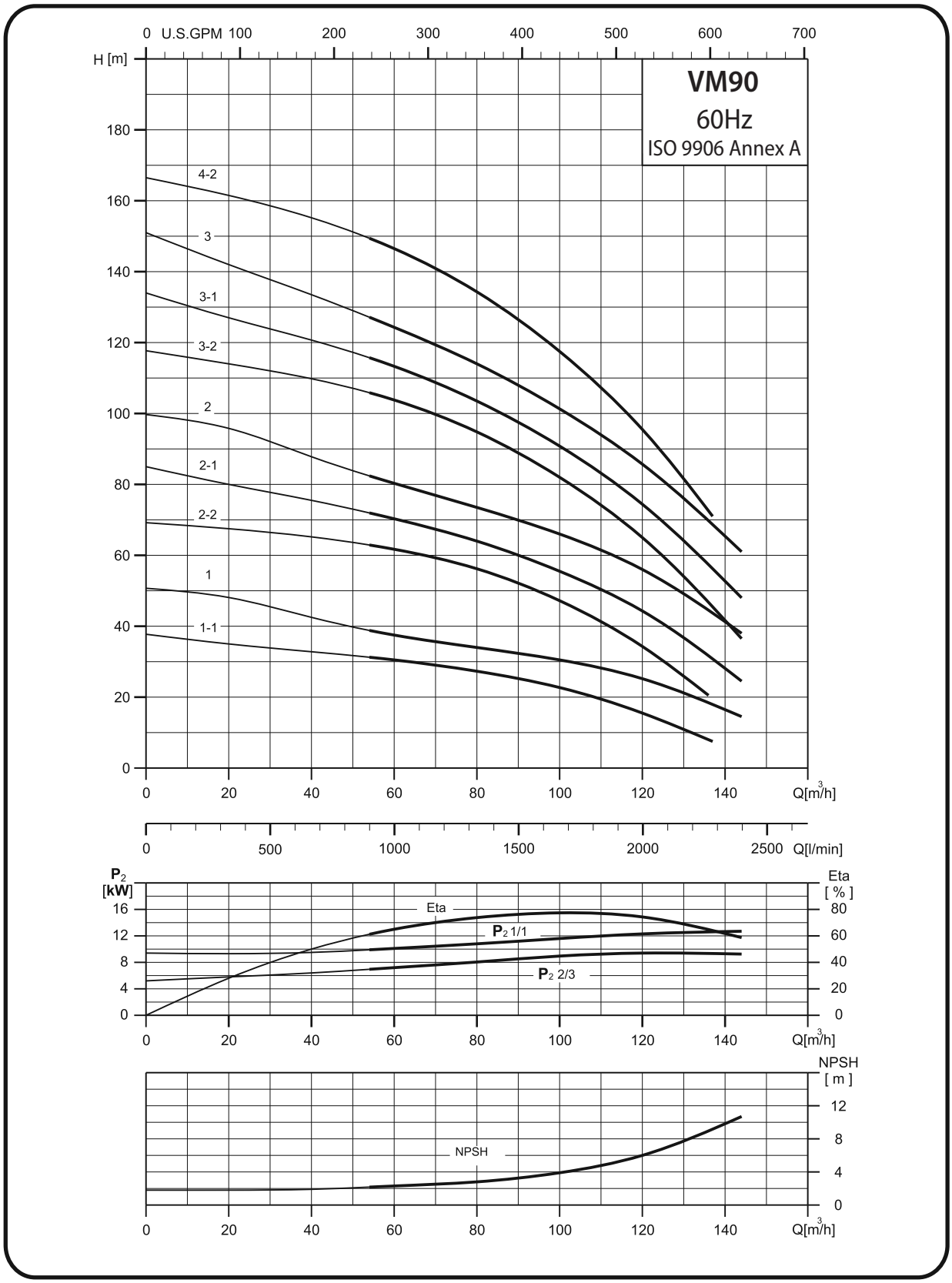

Dimensional sketch - VM90

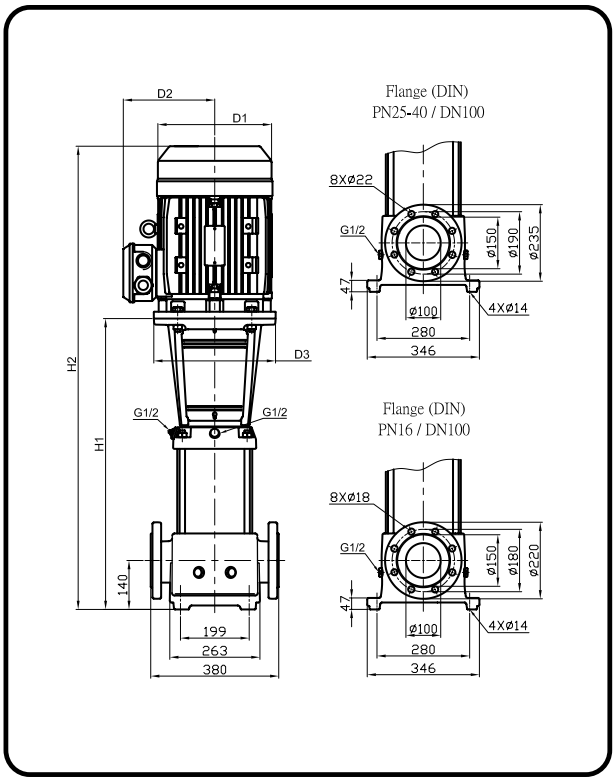

Dimensions and Weight - VM90

Model	Motor P_2 [kW]	Dimension [mm]					Net weight [kg]
		H1	H2	D1	D2	D3	
VM 90-1-1	11.0	682	1127	268	215	350	158.64
VM 90-1	15.0	682	1171	268	215	350	169.66
VM 90-2-2	18.5	774	1309	317	242	350	209.82
VM 90-2-1	22.0	774	1353	317	242	350	220.60
VM 90-2	30.0	774	1397	317	290	400	305.86
VM 90-3-2	37.0	866	1591	398	365	400	379.94
VM 90-3-1	37.0	866	1591	398	365	400	379.96
VM 90-3	45.0	866	1591	398	365	450	407.98
VM 90-4-2	45.0	958	1683	398	365	450	414.92

Dimensional sketch VMC90 / VMN90

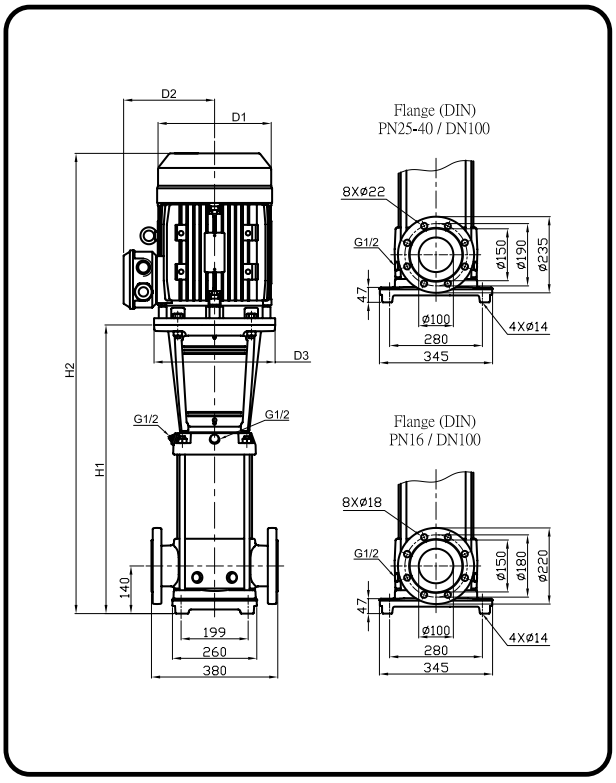

Dimensions and Weight VMC90 / VMN90

Model	Motor P_2 [kW]	Dimension [mm]					Net weight [kg]
		H1	H2	D1	D2	D3	
VMC / VMN 90-1-1	11.0	686	1131	268	215	350	148.88
VMC / VMN 90-1	15.0	686	1175	268	215	350	159.90
VMC / VMN 90-2-2	18.5	778	1313	317	242	350	199.92
VMC / VMN 90-2-1	22.0	778	1357	317	242	350	210.70
VMC / VMN 90-2	30.0	778	1401	317	290	400	295.96
VMC, VMN 90-3-2	37.0	870	1595	398	365	400	370.00
VMC / VMN 90-3-1	37.0	870	1595	398	365	400	370.02
VMC / VMN 90-3	45.0	870	1595	398	365	450	398.04
VMC / VMN 90-4-2	45.0	962	1687	398	365	450	404.82

VM120 / VMC120 / VMN120

Performance Curves

The perfomance curve applies to the VM, VMC and VMN version of the pump.

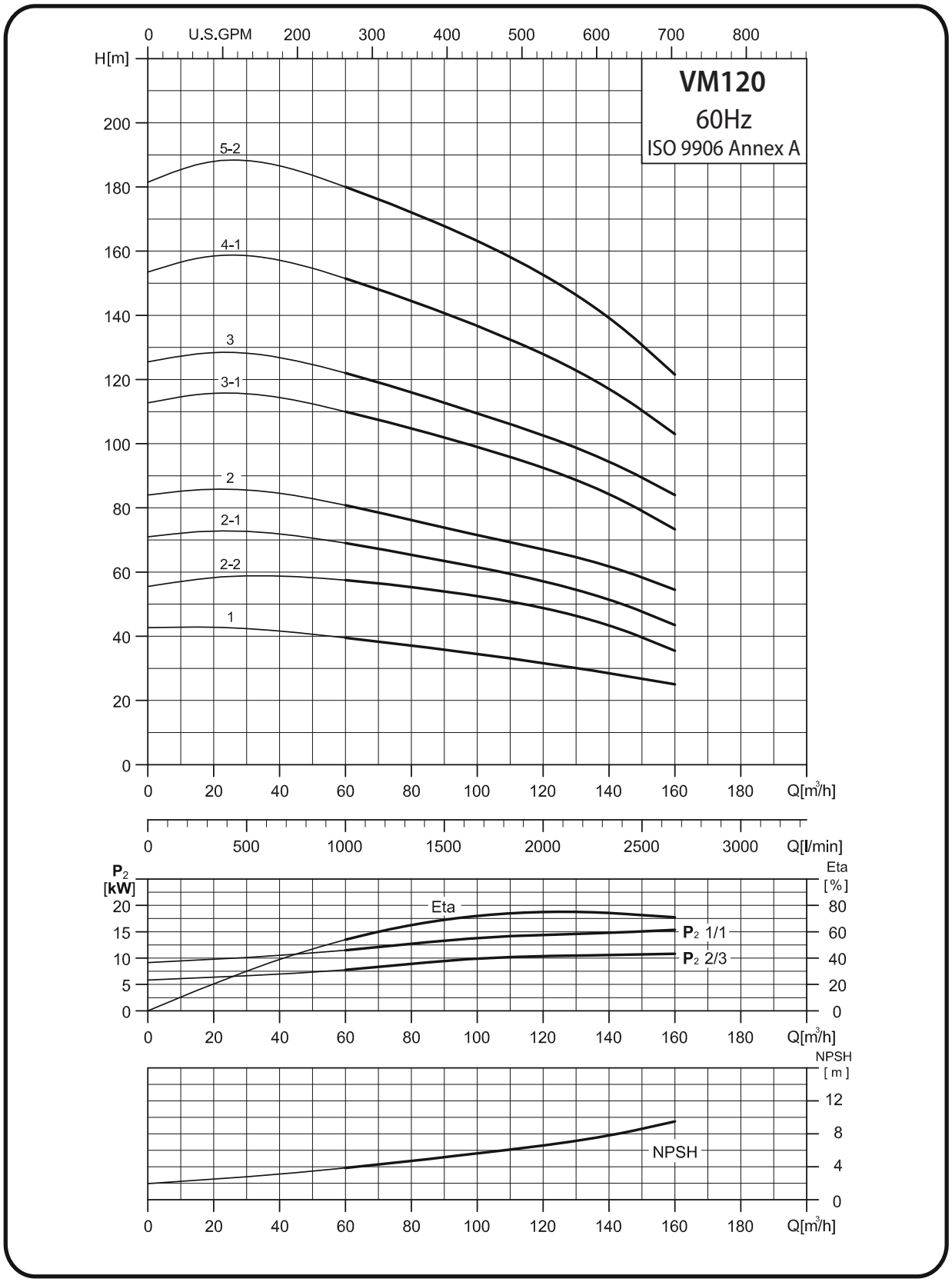

Dimensional sketch - VM120

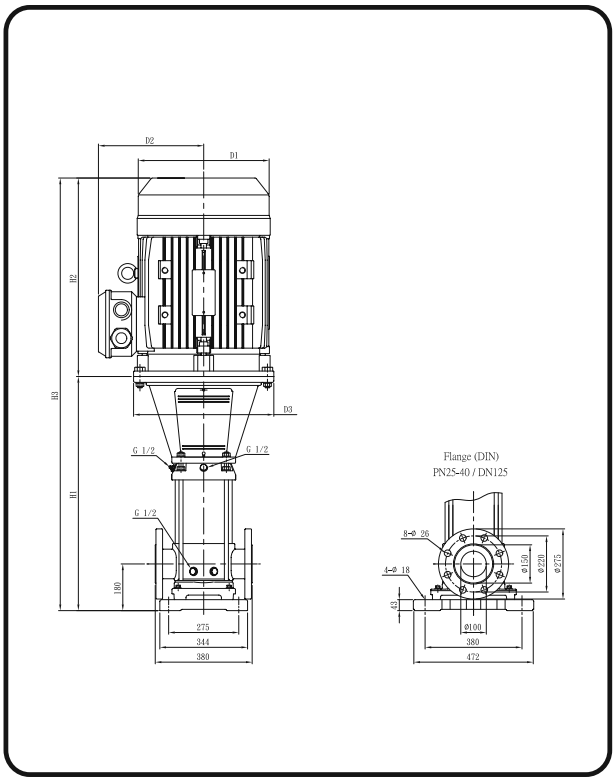

Dimensions and Weight - VM120

Model	Motor P_2 [kW]	Dimension [mm]						Net weight [kg]
		H1	H2	H3	D1	D2	D3	
VM 120-1	18.5	834	550	1384	318	245	350	231.75
VM 120-2-2	30	990	660	1650	420	295	400	348.42
VM 120-2-1	30	990	660	1650	420	295	400	348.52
VM 120-2	37	990	660	1650	420	295	400	361.58
VM 120-3-1	45	1149	690	1839	470	325	450	429.22
VM 120-3	55	1175	770	1945	510	355	550	543.46
VM 120-4-1	75	1331	845	2176	580	410	550	715.59
VM 120-5-2	75	1486	845	2331	580	410	550	725.36

Dimensional sketch VMC120 / VMN120

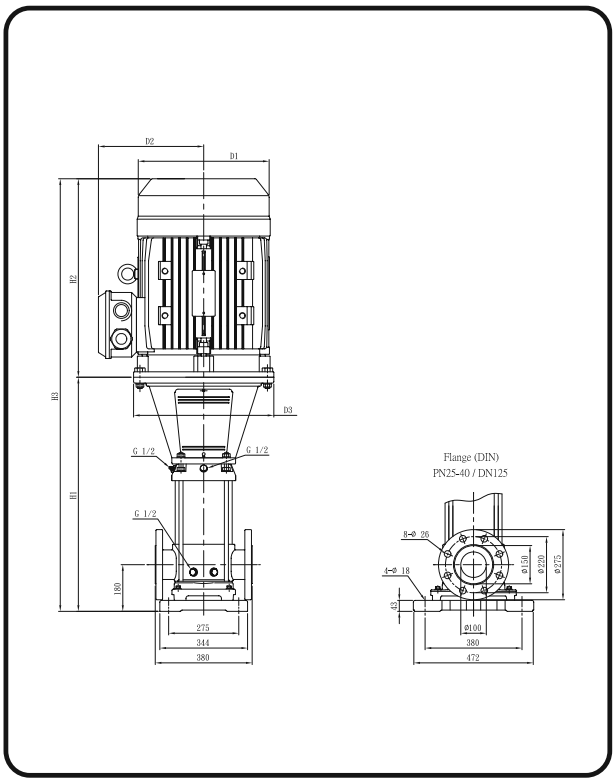

Dimensions and Weight VMC120 / VMN120

Model	Motor P_2 [kW]	Dimension [mm]						Net weight [kg]
		H1	H2	H3	D1	D2	D3	
VMC / VMN 120-1	18.5	837	550	1387	318	245	350	212.42
VMC / VMN 120-2-2	30	993	660	1626	420	295	400	333.22
VMC / VMN 120-2-1	30	993	660	1626	420	295	400	333.32
VMC / VMN 120-2	37	993	660	1626	420	295	400	333.42
VMC / VMN 120-3-1	45	1152	690	1842	470	325	450	414.12
VMC / VMN 120-3	55	1178	770	1948	510	355	550	528.51
VMC / VMN 120-4-1	75	1334	845	2179	580	410	550	700.86
VMC / VMN 120-5-2	75	1489	845	2334	580	410	550	710.59

VM150 / VMC150 / VMN150

Performance Curves

The perfomance curve applies to the VM, VMC and VMN version of the pump.

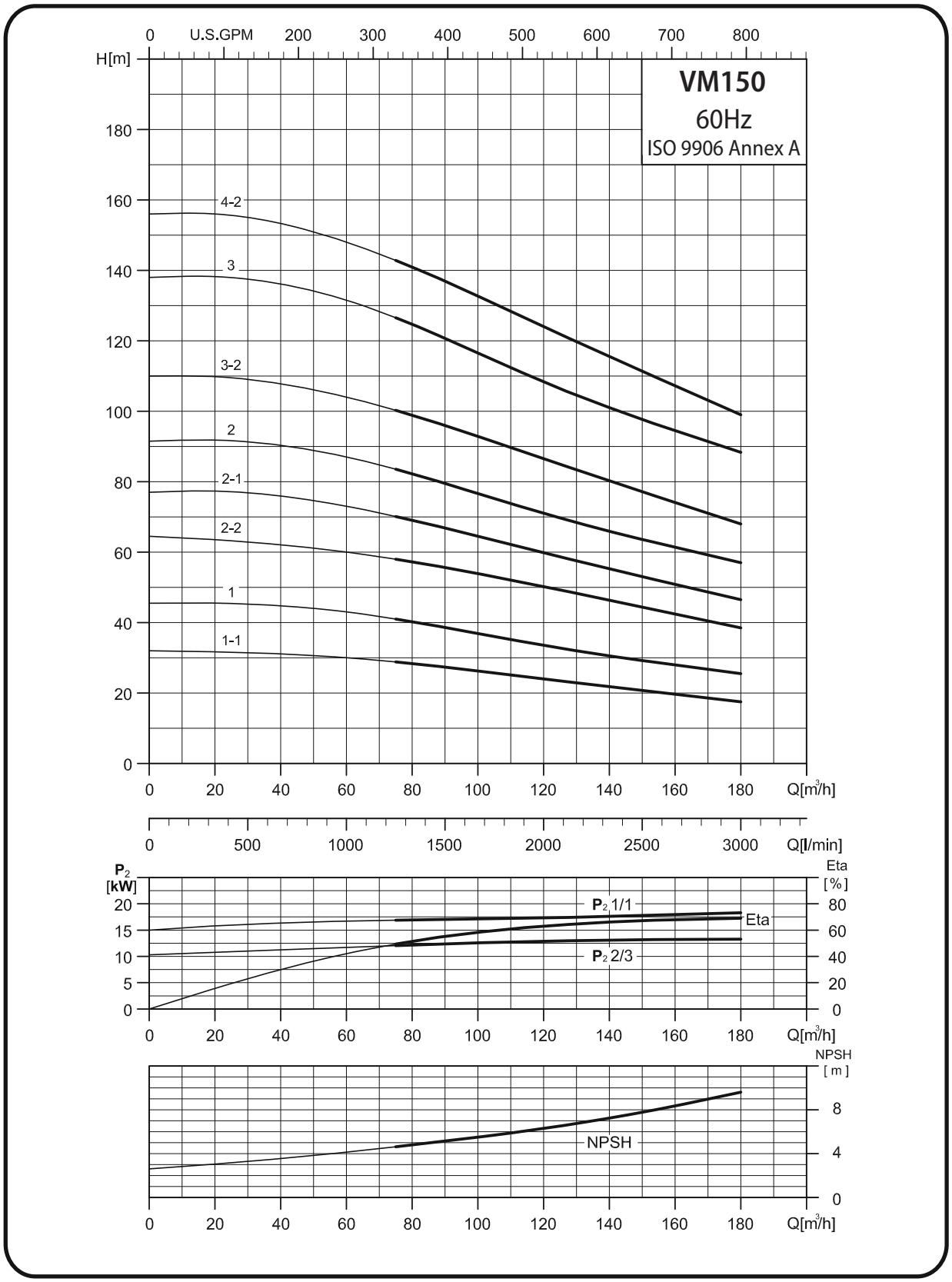

Dimensional sketch - VM150

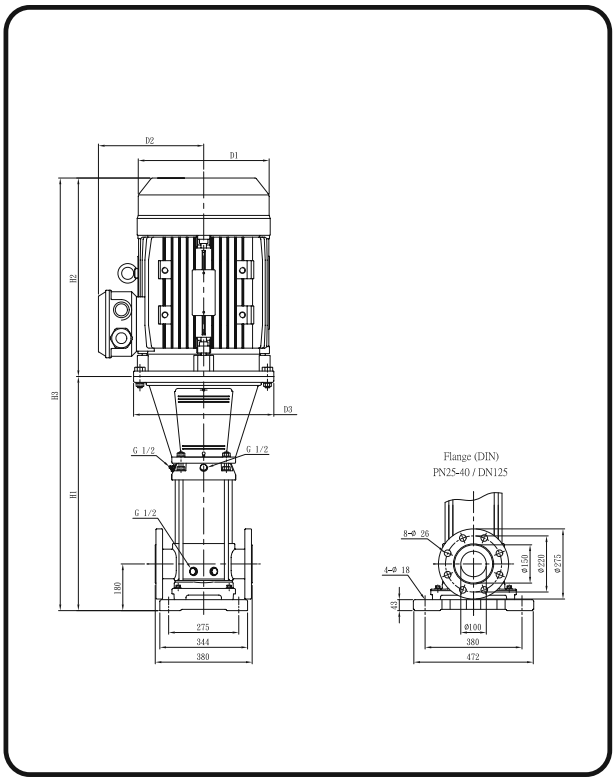

Dimensions and Weight - VM150

Model	Motor P_2 [kW]	Dimension [mm]						Net weight [kg]
		H1	H2	H3	D1	D2	D3	
VM 150-1-1	18.5	834	550	1384	318	245	350	231.67
VM 150-1	22	834	580	1414	358	265	350	274.48
VM 150-2-2	30	990	660	1650	420	295	400	348.42
VM 150-2-1	37	990	660	1650	420	295	400	361.42
VM 150-2	45	994	690	1684	470	325	450	419.49
VM 150-3-2	55	1175	770	1945	510	355	550	543.36
VM 150-3	75	1175	845	2020	580	410	550	705.91
VM 150-4-2	75	1331	845	2176	580	410	550	715.66

Dimensional sketch VMC150 / VMN150

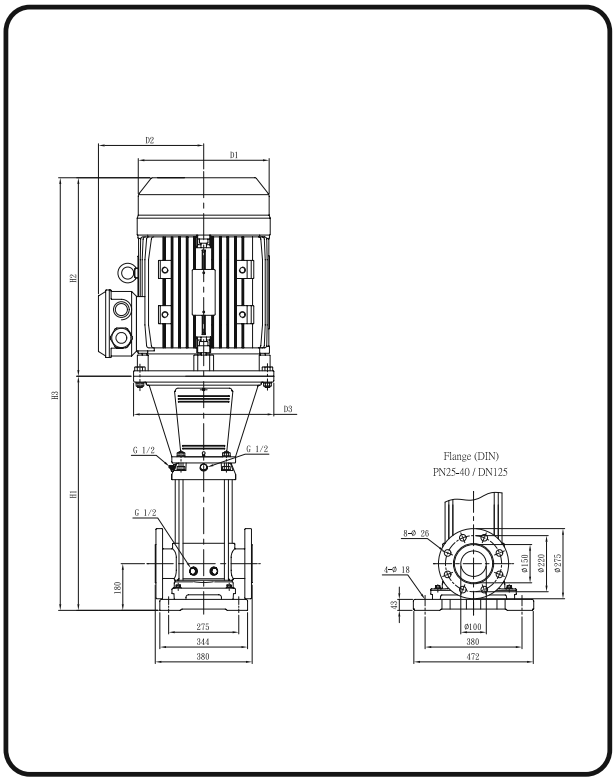

Dimensions and Weight VMC150 / VMN150

Model	Motor P_2 [kW]	Dimension [mm]						Net weight [kg]
		H1	H2	H3	D1	D2	D3	
VMC / VMN 150-1-1	18.5	837	550	1387	318	245	350	215.82
VMC / VMN 150-1	22	837	580	1417	358	265	350	248.82
VMC / VMN 150-2-2	30	993	660	1653	420	295	400	332.64
VMC / VMN 150-2-1	37	993	660	1653	420	295	400	345.67
VMC / VMN 150-2	45	997	690	1687	470	325	450	403.72
VMC / VMN 150-3-2	55	1178	770	1948	510	355	550	527
VMC / VMN 150-3	75	1178	845	2023	580	410	550	690.31
VMC / VMN 150-4-2	75	1334	845	2178	580	410	550	699.16

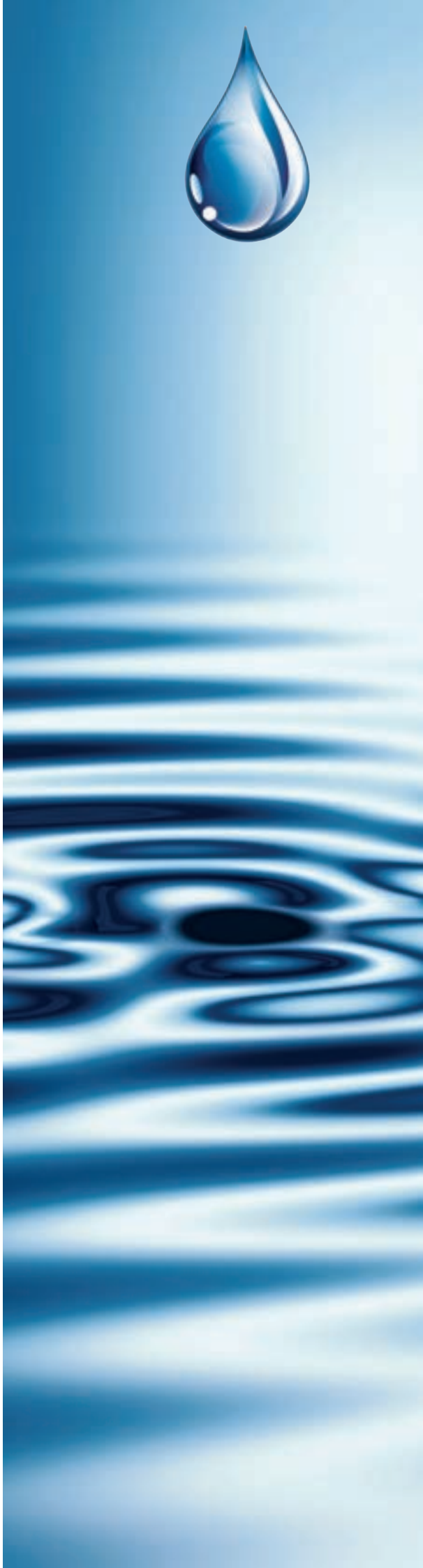

Swiss Pump Company AG
Moosweg 36
CH - 3645 Thun - Gwatt
Switzerland
Tel. +41 33 223 11 00
Fax +41 33 223 11 22
mail@swisspump.com

www.swisspump.com